Philips Ingenia Ambition S

781359

Site preparation specifications

Project reference	Typical manual
Document date	20200507

Philips contact

Telephone

e-mail

PHILIPS

Table of contents

1 General ... 2
1.1 Purpose ... 2
1.2 Roles ... 2
1.3 Conditions of use ... 2
1.4 Responsibilities ... 2
1.5 Site readiness ... 3
1.6 Health & Safety ... 3
1.7 Equipment details ... 6

2 Building ... 12
2.1 General information ... 12
2.2 Floor requirements / Floor provisions ... 19
2.3 Ceiling requirements / Ceiling provisions ... 22
2.4 Wall requirements / Wall provisions ... 24

3 Electrical ... 28
3.1 General information ... 28
3.2 Power ... 29
3.3 Ducting specifications ... 35
3.4 Networking specifications ... 38
3.5 Fire detection ... 38
3.6 E-Alert ... 39

4 Mechanical ... 40
4.1 General information ... 40
4.2 Heating, Ventilation and Air Conditioning (HVAC) ... 41
4.3 Liquid data ... 46
4.4 Water ... 49
4.5 Sewerage ... 49
4.6 Sprinkler ... 49
4.7 Compressed air ... 49
4.8 Gases ... 49

5 Environmental protection ... 50
5.1 Magnetic resonance ... 50
5.2 Maximum magnetic field strengths ... 57

6 Drawings ... 59
6.1 Site specific drawings ... 59

7 Annex ... 60
7.1 Electrical diagram ... 60

1 General

1.1 Purpose

The Site preparation specifications should provide all required information to the customer and relevant contractors to enable the site to be prepared to the necessary quality and timescales ready for delivery and installation of the equipment.

1.2 Roles

Within this document the following groups are referred to:

- **Philips**: Equipment manufacturer, equipment supplier
- **Customer**: Purchaser, end user
- **Contractor / Third party**: member of the Architect, Engineers & Contractors (AEC) community, hired by either the customer or Philips

1.3 Conditions of use

The information within this document and any included drawings is provided solely for the purpose of providing the customer and/or their architects/building contractors, or the Philips appointed building contractor, with information concerning the Philips equipment locations and associated details, e.g. fixing positions, cable duct routes etc.

This document and any included drawings are not for architectural or building construction purposes other than stated above.

The enabling works detailed in this manual is solely for the installation of Philips supplied equipment, any additional requirements by the customer must be clearly identified and notified to Philips Healthcare and are the responsibility of the customer.

Philips assumes no liability nor offers any warranty for the fitness or adequacy of the premises or the utilities available at the premises in which the equipment is to be installed, used, or stored.

All work described must be carried out in compliance with specifications indicated in this package provided by Philips Healthcare; any deviation must first be agreed by Philips Healthcare project manager.

The specifications laid out in this document can be subject to change by Philips. All parties must ensure they are using the latest version.

1.4 Responsibilities

The customer is responsible for any classification of the room in relation to its intended use, and must notify Philips Healthcare project manager and the contractors of any additional specifications this may include.

The customer remains responsible for all works that are necessary for site preparation, unless works that are included in the Philips contract, in which case the term "customer" can be read as "Philips contractor".

The customer should ensure that the work areas are lockable with limited access. Philips Healthcare should have access to the areas (via keys / access codes) prior to the start and during the installation.

The customer shall advise Philips of conditions at or near the site which could adversely affect the carrying out of the installation work and shall ensure that such conditions are corrected and that the site is fully prepared and available to Philips before the installation work is due to begin.

The contractor and or architect must ensure that the works carried out in line with this document comply with local regulations unless more strict requirements are set out by this document or defined by the customer.

1.5 Site readiness

We expect the site of the installation to be completely finished, clean, dry, and clear of contractors and meet the requirements defined in this document before the equipment delivery / start of the installation.

Failure to meet these requirements could result in delays to the timelines, additional charges etc.

1.6 Health & Safety

1.6.1 Safety considerations for magnetic resonance applications

It is the responsibility of the customer to satisfy the following safety requirements:

1. Controlled zone:
   - During the siting of a Philips MR system, a controlled access area around the MR system must be defined where the field strength will exceed 0.5 mT (5.0 G). Warning signs "CAUTION" - Magnetic field permanently switched on" should be used to indicate this area. The area must be clearly visible, e.g. by markings on the floor, barriers or other means to control access to this area by unauthorized persons.
   - Persons having pacemakers, neuro-stimulators, insulin pumps or similar devices, or implants of ferromagnetic material (i.e. surgical clips, artificial cardiac valves, prostheses or metal splinters) must stay outside the controlled access zone.
   - The security procedures at the entrances of the examination room should prevent prohibited objects from being brought into the examination room. Metal detection equipment can be used.
   - Ferromagnetic objects, such as scissors, tools, gas bottles, vacuum cleaners and stretchers, must be kept outside the examination room. Such objects will be pulled to the magnet, and may cause injury to patients and staff, or may damage the equipment.
   - Magnetic shielding requirements to minimize the controlled zone, or contain it within the exam room are to be determined on a site by site basis. If additional shielding is required, consult with Philips service. The customer accepts full responsibility for all costs associated with additional magnetic shielding.
2. Emergency Run Down Unit (ERDU):
   - The MR system is provided with two magnet Emergency Run Down Units (ERDUs) to terminate the magnetic field. This should only be used in case of an emergency.
   - If in a medical emergency, non MRI-safe instruments must be used, the patient must be removed from the examination room first.
   - In case of a deliberate quench (magnet run-down) by the operator to implement life supporting and other safety procedures, the magnet field strength at the isocenter is reduced to a value below 20 mT (200 G) within 30 seconds.

Magnetic fringe field

The magnetic fringe field produced by the magnet may extend beyond the MR department or building. This is called the fringe field region. A detailed study of the fringe field and its relationship to the surrounding equipment and activities is an essential part of any site feasibility study.

The field generated by the magnet extends beyond the magnet itself. Within this volume it can exert forces on ferromagnetic objects. The field can affect the function of magnetically susceptible devices, such as pacemakers, TV monitors, magnetic data storage devices, etc.

Max. field strength	Equipment
≤ 0.1 mT (1.0 G)	Nuclear cameras, PET scanners, linear accelerators, electron beam microscopes, image intensifiers, blood chemistry analyzers, cyclotrons, CRT monitors, Ultrasound machines with colour CRT monitor, ECG equipment with CRT monitor (see notes), and CT scanner with photo multipliers
0.2 mT (2.0 G)	CT scanners manufactured after 2003
0.25 mT (2.5 G)	CT scanners manufactured prior to 2003, power and main distribution transformers,
0.5 mT (5.0 G)	Flat detector, neurostimulators, biostimulation devices, flat detectors, computers, tape storage, disc drives, and pacemakers

Max. field strength	Equipment
1.0 mT (10.0 G)	HVAC equipment, X-ray tubes, emergency generators, food prep areas, chillers, telephone switching, magnetic data carrier (diskette, credit card), analog watches and clocks, fuel storage tanks, and motors/pumps > 5 HP, and ECG equipment with LCD monitor (see notes)
1.5 mT (15.0 G)	Film processors, and cardiac recorders
2.5 mT (25.0 G)	Ultrasound machines with LCD monitor
3.0 mT (30.0 G)	Flat panel (LCD) monitors, LCD Video Monitor
5.0 mT (50.0 G)	Laser imagers, telephones, X-ray electronics, and metal detectors
10.0 mT (100.0 G)	Oxygen monitor sensor
60.0 mT (600.0 G)	Optical disk data carrier

Permissible field strengths

Note!

- The fringe field limits are provided for preliminary planning purposes and represent the approximate exposure to magnet field acceptable for the type of instrument. It is the responsibility of the customer to have the vendor of the equipment in question set acceptable magnetic field limits for proper operation of their equipment.
- Meant is ECG equipment outside the examination room. Only MRI compatible ECG equipment can be used within the examination room. For specifications consult the supplier.
- Typically 1.5 m further than the projected 0.1 mT fringe field, the 0.05 mT field strength is reached. This is considered to be equal to the local earth magnetic field, the fringe field from the MR has no influence.

Reduction of the magnet fringe field (0.5 mT area) can be required in certain circumstances. Within certain limits, this can be achieved by applying passive magnetic shielding on the walls of the examination room.

This passive shielding consists of special iron plates (e.g. ARMCO, Hc < 90 A/m), 2 to 20 mm thick. The total size of the plates depends on the amount of shielding needed.

Magnetic field plot

Field strengths are measured in three orthogonal planes. The axes are identified as:

- X = Vertical axis; up (positive), down (negative)
- Y = Horizontal axis; right (positive) to left (negative)
- Z = Length axis; front (positive) to back (negative)

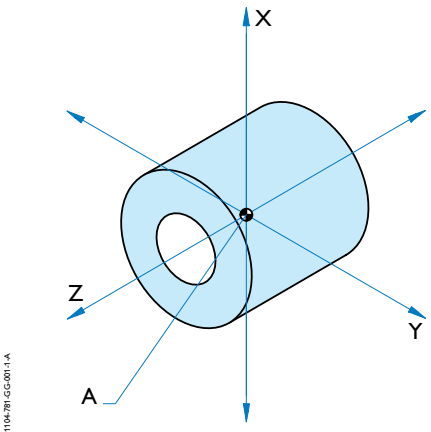

Axes and isocentre

The origins of the three axes are located at the isocentre (A) of the magnet. The isocentre is 1 m above finished floor level.

Note!

Magnetic shielding

Magnetic shielding requirements are to be determined on a site by site basis. If additional shielding is required, consult the Philips Healthcare project manager. The customer accepts full responsibility for all cost associated with additional magnetic shielding.

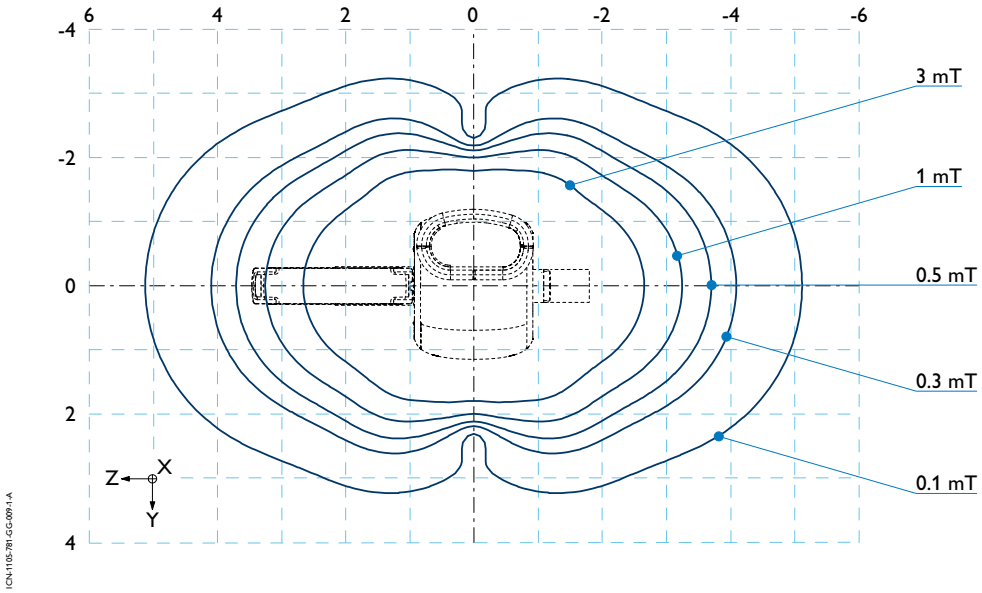

Graphical representation of the magnetic field plot

Note!

Tolerances

Due to variability in the orientation of the site with respect to the earth's magnetic field and construction of the site, the tolerances in the table should be taken into account.

	0.1mT (1 G)	0.3mT (3 G)	0.5mT (5 G)	1mT (10 G)	3mT (30 G)
Tolerance [m]	± 0.8	± 0.3	± 0.2	± 0.1	± 0.1

Liquid helium or helium gas

- Ingenia Ambition is a new generation wide bore MR system with BueSeal magnet technology. The system have a sealed magnet with a low volume of liquid helium inside the magnet. So no helium vent pipe is needed anymore. When the magnet Emergency Run Down Unit (ERDU) is used for immediate shutdown of the magnetic field, or during a spontaneous magnetic field shutdown (quench) occurs the helium will not evaporate because the helium stays inside the magnet if it loses magnetic field.
- Refill of liquid helium on site is not needed anymore, so helium gas refill manifold and dewars are not needed anymore for the sealed magnet. An emergency vending system, RF-feedthrough and overpressure grid are not needed anymore because helium cannot be released inside the magnet room. However it is recommended to install a small RF-feedthrough to avoid air handling issues like under or overpressure due to air flow unbalancing.
- Under no circumstances should the magnet be energized prior to the installation of the Emergency Run Down Unit (ERDU).
- Monitoring of the oxygen content of exam room air is maybe required by local regulations, but not needed anymore beause helium cannot be released out.
- Liquid helium is extremely cold and will cause frostbite when in contact with the human body. Use protective gloves, goggles and clothing when handling liquid helium.
- Only properly trained staff should handle cryogenic liquids.

Anaesthetic gases

The MR system is not certified as anaesthetic proof equipment, non-flammable gases can be used.

- Some disinfectants vaporise to form explosive mixtures. If such products are used the vapours must be allowed to disperse before the equipment is returned to use.
- Provisions for medical gases, if required/permitted, should preferably be mounted at the patient support side of the magnet.

Safety zones

MRI safety guidelines recommend that facilities be zoned to ensure patient safety. It is the sole responsibility of the customer to regulate and/or restrict staff and patient flow within the MR environment as necessary. MR safety zones are described as follows:

- Zone I - Entrance to facility, reception and waiting areas. No restrictions to patient access.
- Zone II - Patient holding area and/or dressing rooms. Patient access may be restricted, or staff supervision may be required.
- Zone III - MR control area and equipment room. Accessible only by authorized or properly trained MR personnel. It is recommended that a card-key locking device be used to gain access to these areas.
- Zone IV - Scanner room. This area should be accessible solely from Zone III, and access to the scanner room should be observed and controlled by authorized MR personnel. It is recommended that a warning light be illuminated at all times, with a 24-hour backup power system in the event of a power outage.

1.7 Equipment details

1.7.1 Equipment specification

The table lists the basic specifications for the ordered equipment.

Equipment	Dimensions W×D×H [mm]	Mass [kg]	Heat [W]	Noise [dB(A)]
Scanner gantry	2278x1838x2505	3700	2000	94 - 99 (total examination room)
Patient support	560x2500x947	260	-	-
System filter box	950x220x1534	80	1000	94-99 (total examination room)
Mains distribution unit	600x370x1280	135	200	75 (total technical room)
Data Aquisistion Control Cabinet	600x851x1955	397	Max. 1000	75 (total technical room)
Liquid cooling cabinet	600x800x1958	326	1200	75 (total technical room)
Backup Power connection panel	600x370x1280	135	-	75 (total technical room)
Gradient amplifier	555x800x1955	467	-	75 (total technical room)
Operator's console	562x61x368 (24'' LCD monitor)	7,6 (24" LCD monitor)	-	41 (1 m from cabinets)
Table for operator's console	1600x1000x740	100	-	-
System air cooling unit	506x252x395	25	700	75 (total technical room)
Air cooled Cryo cooler	442x639x886	110	4800 (50Hz), 5600 (60Hz)	75 (total technical room)
Wall camera for patient observation	86x169x130	1	-	-
Monitor for patient observation	404x201x442	5.95	100 (additional)	-
IntelliSpace portal (HX)	PC: 226x661x479	19	870 (additional)	55 (additional)
Patient trolley (FlexTrak fixed)	2700x800x950	78	-	-
Accessory cart	885x550x904 (1670)	45	-	-
Accessory cabinet	1600x670x2080	600	-	-

Heat output level [W]		
Examination room	Technical room	Control room
2000	Standby/peak: 8000	300

1.7.2 Delivery details

The complete access route must be capable of handling the transport weight and dimensions of the pre-assembled magnet including transport tools.

The delivery routes will be checked in advance by the Philips Healthcare project manager.

The table lists the critical requirements for delivery. In case of any potential problems with these requirements please contact Philips Healthcare project manager.

Requirement	Specification
Site accesibility	Large truck, Philips rental transport wheels, crane
Longest package	2320 mm
Elevator & floor loading	The equipment delivery route must be suitable to take the load and delivery of the packages and the transport tools (e.g. pallet truck, dolly, etc.)
Heaviest package (excl. transport tools)	3700 kg

Transport of the magnet

The magnet is the only system part that cannot be transferred through the RF-door. Refer to the drawings *Building modifications and wall provisions* for more information about the magnet transfer opening.

- Additional height for protective floor covering, and/or other site-specific restrictions must be added to the transport height.
- All magnets are delivered pre-assembled.
- The magnet will be delivered with transport beams attached. The wheels and hydraulic lifting tool will be delivered by the **Transport and Installation team**. An additional order is not needed.

Rigging

- Rigging is customer/contractor's responsibility unless specific arrangements have been made with Philips Healthcare.
- Assembled magnet weight is 3700 kg.
- Transport via wall: A height of 2400 mm and width of 2500 mm is recommended.
- Transport via roof: A length of 2500 mm and width of 2500 mm is recommended.

Note!

Minimum transport height

- A rotation tool is not available for the (pre-assembled) magnet.
- **Minimum transport height is 2290 mm. No further reduction possible!**

Dimensions of a pre-assembled magnet

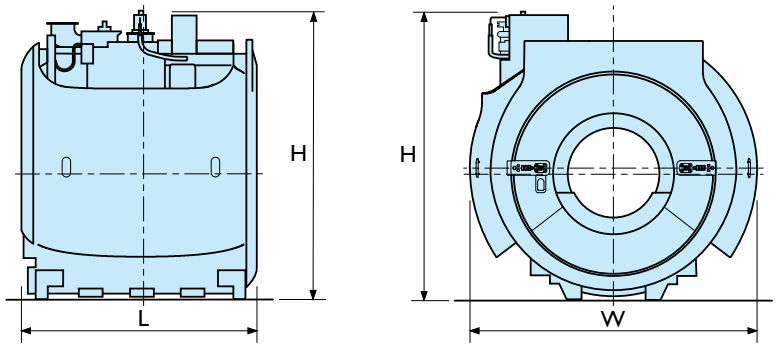

ICN-1104-781-GG-003-1-A

	Length (L) [mm]	Width (W) [mm]	Height (H) [mm]
Pre-assembled magnet assembly including covers	1870	2280	
If transport width is > 2280 mm			2290
If transport width is < 2280 mm (see notes)			2320

Note!

- If the transport width is < 2280 mm, the magnet needs to be transported sideways. Now the height increases due to a different location of the wheels under the magnet.
- The magnet is without a helium vent pipe interface.

Dimensions of a bare magnet

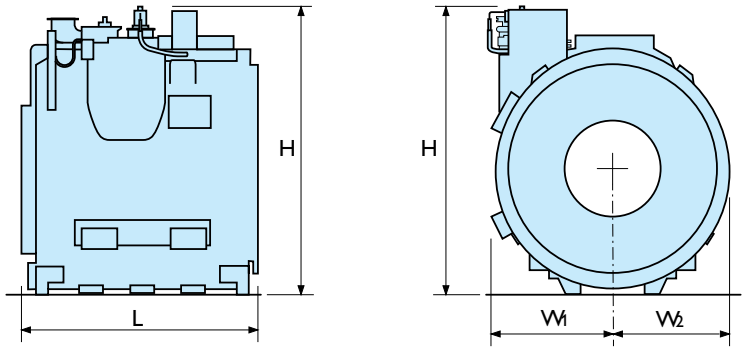

ICN-1104-781-GG-0041-A

	Length [mm]	Width [mm]	Height [mm]
Pre-assembled magnet assembly excluding covers	1820	1940 (W1 = 1000, W2 = 940)	
If transport width is > 1940 mm			2290
If transport width is < 1940 mm (see notes)			2320

Note!

- If the transport width is < 1940 mm, the magnet needs to be transported sideways. Now the height increases due to a different location of the wheels under the magnet.
- The magnet is without a helium vent pipe interface.

1.7.3 Storage conditions

If storage of the equipment at the customer site is required and agreed with the Philips Healthcare project manager, the following critical requirements must be maintained. In case of any potential problems with these requirements please contact the Philips Healthcare project manager.

It is recommended to store the magnet with the cold head functional.

Requirement	Specification
Temperature	-20 to +50 °C
Relative humidity	5 - 95% (non-condensing)
Maximum tilt angle	20 degrees
Vibration	-

Caution!

1. The minimum temperature is a critical specification

A part of the delivery is the phantom kit. The absolute minimum temperature for this kit is + 5°C. Make sure that this part is not transported or stored under temperatures mentioned. If the temperature is critical, make sure you find an alternative for the phantom kit. If the magnet is subjected to temperatures below – 20°C, the performance can be drastically affected. Correction of this is time-consuming and expensive.

Caution!

2. The magnet is shipped cold.

To prevent that the magnet warms up it must be cooled with the cryo cooler functional within **12 days after the magnet has left the factory.** Cooling down of a warm magnet introduces technical risks and is a lengthy exercise. If the transport time is long or you encounter a long period of time that the Air cooled Cryo-cooler or LCC is not connected, contact Philips logistics for support.

Caution!

3. Transportation cryostat

If the cryostat is transported, the bore (Z axis) shall be oriented from front to rear of the truck, ship or airplane. For road transport, an air suspended truck must be used. Transport by sea is only possible when a special crate is available for the magnet. If required, contact logistics. Transport by train is not allowed due to loading and accelerations associated with rail transport.

Condensation on the surface of the magnet assembly due to rapid changes in temperature must be avoided.

Caution!

4. Use a spreader beam

The use of a spreader beam is mandatory. If the beam is not used, serious damage to the cryostat or attached parts can occur. This spreader beam has to be arranged locally and this shall be discussed in advance with your transport company. A magnet transport document is attached to the magnet during transport for more detailed information. The shock indicators placed on some system parts (e.g. magnet) shall be checked before unloading the part from the truck in order to define responsibilities. (The procedure can be found in the Transport manual)

Handle all system parts with care and keep the parts packed as long as possible.

2 Building

2.1 General information

Please ensure that you read all sections of this document and take care to work with the other contractors on any overlapping activity.

All work described must be carried out in compliance with specifications indicated in this package provided by Philips Healthcare. Any deviations must first be agreed by Philips Healthcare project manager.

All work described in this section is to be executed and supplied by the relevant contractor / party, unless otherwise indicated as Philips Healthcare, or defined in a subsequent document.

Philips provides specifications within this document relative to equipment anchorage and floor/walls/ceiling loading (as applicable). The customer shall be solely responsible for the structural integrity/adequacy of the floor, walls and ceiling upon which the equipment will be placed. In addition the customer shall be responsible to ensure any anchorage methods and designs are suitable. Any tests required shall be the customer's responsibility.

All seismic anchorage hardware, including brackets, backing plates, bolts, etc., shall be supplied and installed by the customer / contractor unless otherwise specified within the support legend on the drawings. Installation of electronic cabinets to meet seismic anchorage requirements must be accomplished using flush mounted expansion type anchor/bolt systems to facilitate the removal of a cabinet for maintenance. Do not use threaded rod/adhesive anchor systems. Consult with Philips Healthcare project manager regarding any anchor system issues.

The area must be prepared to accept cable ducting as required (Feed-through & troughs).

When drilling holes and Feed-throughs in the walls, floor and ceiling it must be ensured that the structural integrity of the room is maintained.

The contractor must ensure that fixing holes, especially tapped holes, are kept clear of any paint / levelling compound etc.

The contractor must ensure that the reference axes, as shown on the drawings, are precisely aligned, and marked on the floor (and ceiling when ceiling provisions are applicable).

Acoustical noise

Point of measurement	Value
Operator Position - PICU	99 dBA
Patient support - Front	96 dBA
1 m beside the magnet	94 dBA
1 m from equipment room cabinet	75 dBA
1 m from Operator Console	55 dBA

Typical airborne noise levels

Note!

- Maximum levels can increase by 4 dBA during various sequences and do not include noise produced by third party equipment.
- The system air cooling unit (SACU) is normally installed inside the equipment room. Anticipate 72 dBA acoustical noise generated by the SACU. Never install SACU in the operators or reporting room.

Acoustical noise suppression

Sound absorption coefficient of materials to be used	
Suspended ceiling - exam room	> 0.7
Suspended ceiling - control room	> 0.6
Suspended ceiling - equipment room	> 0.6
Main frequency to be attenuated	600 to 1000 Hz

Contact an architect to determine which of the following acoustical noise means can be provided, if needed. Depending on the building construction additional acoustical noise suppression to the same floor level or to other floor levels can be achieved via the following means:

- Additional brick wall between the RF enclosure and technical/operator room or other room. Thickness: 11-12 cm. Specific weight: 1.8, 250 kg/m^2. R'_w > 52 dB.
- A double wooden wall (2 mm x 12.5 mm thick) with 80 mm thick mineral fiber material in between, type W-w according DIN 18165 Teil 1.
- The RF door and RF window can be assembled to a construction with sufficient attenuation for acoustical noise:

  RF door R'_w > 32 dB,
  RF window R'_w > 40 dB (panes of different thicknesses).
- The ceiling inside the RF enclosure can be finished with a 100-mm thick mineral fiber material, type W-w according DIN 18165 Teil 1.
- Avoid openings from examination room to other rooms (except needed openings to technical room)

Additional acoustical noise suppression can be achieved via the following means:

- Free standing RF enclosure.
- No other coupling in the building than the floor of the RF enclosure
- All other interfaces off the RF enclosure to the building (wall and ceiling) must be de-coupled for to avoid noise (flexible connection of air conditioning pipes etc.).

Contact noise

The MR system produces vibration forces over a range of frequencies. These forces are transmitted through the MR feet to the RF foot pads, exam room floor, and possibly through nearby columns and beams. Depending on building construction (floor slab type, beam/column size and type, etc.) and magnet

location (slab on grade or suspended floor, proximity to beams/columns, etc.), the energy can travel across large areas/the building. To avoid structural noise nuisances, isolation methods can be used to dampen vibrations and mechanical noise. If needed contact an architect, structural engineer, and/or vibration specialist/acoustic consultant to investigate if the contact noise could be a problem.

- Below a chart (Envelop of A-weighted forces in 1/3rd octave bands acting on the floor) that shows peak hold of each of > 30 clinical scans made. this is nor representation of one individual clinical protocol but a view of cumulative forces. These are measured at the magnet feet rubber pads (Philips provided). Any dampening that the rubber pads provide are not accounted for in these measurements, since they can not be taken directly on the floor (thereby accounting for the dampening of the pads) because vibration results on the floor are dependent on the construction of the floor. Actual floor vibrations are site dependent.
- Acoustical noise transmitted via air is not integrated into these measurements, values can be found in the table above.
- Third party delivered vibration pads are no longer allowed. Philips Healthcare newly designed vibration pads are now delivered and must be used.

Use of third party pads could interfere with the vibration specification of the magnet and the shimming of the magnet due to sinking. Weak pads can also affect the correct alignment of the magnet and patient table.

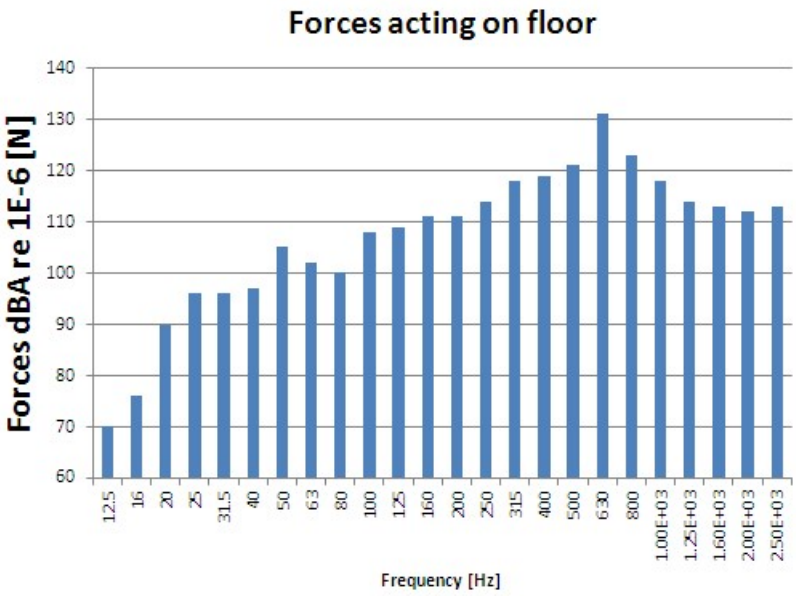

Envelop of A-weighted forces in ⅓rd octave bands, acting on floor

Note!
If floor vibration is out of specification near 8 HZ frequency contact MR Helpdesk (via Site Planning).

RF shielding requirements

Introduction

This section describes the technical aspects of RF shielding for the MR system in a hospital. RF shielding is to be used to:

- Protect the MR system from interference due to RF electromagnetic fields generated by external sources and by some parts of the MR system itself.
- Attenuate the RF signal emitted by the MR system to a level that meets national and international regulations on radiated electromagnetic fields.

The RF shielding must meet requirements for MR systems with a main magnetic field in the range of 0.5 T - 3.0 T. This section deals with MR systems with operating frequencies in the range 15 - 130 MHz.

General policy

- Philips Healthcare specifies the **mandatory requirements** for correct on site functioning of the MR system. These requirements include details of how the RF shielding shall be installed and the conditions this RF shielding must meet.
- Philips Healthcare recommends that only approved RF shielding designs and suppliers are used to guarantee optimum performance of the MR system.
- The RF shielding must be cost effective.
- Philips Healthcare accepts no responsibility for correct operation of the RF shielding. However, the performance of the MR system is only guaranteed if the mandatory requirements are met.
- The RF shielding and all associated equipment must be formally accepted by Philips Healthcare. Certification must be provided by the manufacturer showing details and results of performance checks carried out on the RF shield prior to equipment delivery in accordance with the following codes and standards applicable to the extent indicated:
  - MIL-STD-285: Method of attenuation measurements for electromagnetic shielding enclosures for electronic test purposes.
  - MIL-STD-220A: Standard of safety of electromagnetic interference filters.
  - UL 1283: Standard for safety of electromagnetic interference filters.
- A representative of Philips Healthcare and the hospital shall be present at the time of the checks being carried out.
- The interfaces between the RF shielding and the MR system must be set up as explicitly described in this document.

RF shielding effectiveness

The room has to be built and tested to the following specifications that apply to all parts of the shielded enclosure, including seams, doors, windows, vents and mechanical penetrations:

Values measured analogue to MIL-STD-285		
H Field	0 MHz - 10 MHz	Not relevant
	10 MHz - 15 MHz	90 dB
	15 MHz – 130 MHz	100 dB
E Field and plane wave	5 MHz - 130 MHz	100 dB
	42.6 MHz	100 dB

Required overall attenuation of the RF shielding

These requirements are valid for a bare shield Philips parts not installed and are subject to the following:

- The RF shielding is completely installed.
- Foundation provisions for the magnet and patient support are installed.
- Protective earth wiring (inside and outside the RF Enclosure) is installed.
- All components/equipment to be located inside the enclosure are installed and operational (including all external facilities and their interfaces to systems inside the enclosure, excluding Philips parts).
- All RF enclosure feedthrough frames for Philips must be covered with blind plates (provided by RF vendor).

The responsibility for proper operation of the equipment rests with the supplier(s) and contractor(s), and shall be clearly established before the equipment is installed.

Refer to the section Heating, Ventilation & Air Conditioning (HVAC) in the chapter *Mechanical* for environmental conditions.

Reliability

The shielding must be designed for 100% operation throughout the year.

The expected Mean Time Between Failure (MTBF) is:

Item	MTBF rate
RF enclosure	> 100,000 hours
Doors (see note)	> 10,000 hours or 75,000 open/close cycles
Windows	> 100,000 hours
Electrical filters	> 100,000 hours (per individual "core")
Mechanical filters	> 250,000 hours
Air vents	> 250,000 hours

Typical MTBF rates

If components do not meet this specification, the MTBF must be increased to the specified level by means of a preventative maintenance scheme (inspection, adjustment and replacement).

Note!

Reliability of doors

Call rate 0.5 per year, used 10 times/hour, 12 hours a day, 6 days a week, 50 weeks a year.

Important!

Operational lifetime

The operational lifetime of all individual RF shielding components must be greater than 10 years. If components do not meet this requirement, they must be available as spare parts and must be replaced in a long term preventative maintenance scheme.

Environmental conditions for RF enclosure

The RF-shielding must operate effectively and not suffer damage under the following conditions:

Item	Specification
Temperature range	10 - 40 °C
Humidity	20% to 90%, non condensing
Air pressure	50 to 110 kPa
Water/damp/liquid	Drip
Mechanical vibration	
Frequency	0 - 150 Hz
g-value	0 - 0.1 g
Mechanical shocks	
g-value	0 - 0.1 g
Pulse duration	6 - 10 ms

Environmental conditions for RF enclosure

These conditions also apply for the system wiring, ducts, gas exhausts and other interface provisions. During and shortly after installation, the shielding may be subject to extreme conditions due to construction activities. Power loss or temperature control failure can also cause extreme environmental conditions. Local earthquake regulations must be followed. Special measures may be required to fasten the magnet and patient support to the building.

RF enclosure material

RF enclosures of copper

Philips Healthcare recommends the use of copper as the basic material. This is a result of RF shielding effectiveness, long term stability, design possibilities, manufacturing, customising and costs.

RF enclosures of ferrous materials

Ferromagnetic RF enclosures may be acceptable, but are subject to the following restrictions:

- The floor of the RF enclosure must be of copper or other non-ferrous metal in an area of 3 x 3m directly under the magnet's isocentre.
- The total combined thickness of the ferrous material must guarantee the specified RF shielding effect with the magnet on field.
- All walls must be at least 1600 mm from the isocentre of the magnet. They do not need to be symmetrically located around it.
- Minimal vibration of the ferromagnetic material shall be excluded. This can introduce B0 variations. Special attention should be paid to the RF enclosure ceiling construction.

RF enclosures of aluminium

Aluminum RF enclosures require special attention:

- A thin layer of aluminium oxide, always present on the aluminium, causes inferior electrical contact between RF enclosure parts. This results in less RF attenuation (100 dB is achievable). Doors and windows are especially critical. If no precautions are taken (e.g. special coating measures), the RF shielding quality of the connection between two moving parts of the RF enclosure becomes insufficient, resulting in low attenuation factor.
- To improve the connection quality for windows and doors a thin sheet of brass can be connected to the aluminium surface in question. If the connection is made by an appropriate screw connection, the (electrical) resistance between the brass and the aluminium will be in the 0 – 10 mΩ region. When applied properly, the brass surface in principle will result in an acceptable RF attenuation.
- The specified RF shielding long term quality cannot (= NEVER) be achieved with the use of gaskets for the door, in combination with the already mentioned disadvantages of the aluminium. Therefore, Philips Healthcare strongly recommend the use of "finger stocks".

RF installation

The RF enclosure is preferably constructed in such a way that the magnet can be installed after completion of the RF enclosure and after formal acceptance of the RF enclosure.

Installation schedule

The installation of the RF enclosure and the MR-system can be divided into the following phases :

- Installation of the RF enclosure without the magnet
- Acceptance testing of the RF enclosure. This stage is omitted if the RF enclosure cannot be completed until the magnet is installed.
- Preparation of magnet transport opening ready for delivery of magnet and patient support
- Installation of the magnet and patient support in the RF enclosure, but without Philips Healthcare feedthroughs installed (RF interfaces to be covered with blind cover plates)
- Acceptance testing of the RF enclosure with magnet and patient support installed (only if acceptance testing could not be performed without the magnet)
- Installation of Philips Healthcare delivered remaining parts

Installation of the RF Shielding

The RF enclosure supplier is responsible for installation of the RF shielding. The following parts are installed by Philips Healthcare:

- System Filter Box
- System Air Cooling Unit

All interface surfaces must be cleaned before installation.

Acceptance

Proper functioning of the MR-system depends strongly on the integrity of the RF enclosure, which is itself heavily influenced by the quality of the installation work carried out locally. For these reasons, a formal acceptance of the RF enclosure is essential for every installation, witnessed by both a representative of Philips Healthcare and the hospital. The RF shielding manufacturer must demonstrate that the installed RF enclosure is in accordance with Philips Healthcare specifications.

Acceptance measurements

RF Shielding Measurement:

The acceptance measurements must be performed. These measurements can be performed by the supplier of the RF enclosure, or by a well established third party.

Measurements must be performed without the Philips Healthcare delivered parts that penetrate the RF enclosure. These must be replaced by cover plates. All other facilities delivered by the RF enclosure supplier must be installed and operational.

The test shall be performed on the following potentially weak points:

- Magnet transport opening
- RF door
- RF window
- System Filter Box interface
- Auxiliary filter interface

Earth Leakage Measurement:

The earth leakage current of the auxiliary interfaces through the RF shielding may not exceed a total of 5 mA. Measure with a current probe on the incoming phases to the auxiliary. RF Shielding Resistance Measurement : Resistance at any point of the RF enclosure to the RF enclosure central earth point is less than 100 mΩ. Measure between the central earth point and different points of the RF shielding.

Acceptance Document

The manufacturer must supply an acceptance certificate that includes the measurement protocol and results. The RF enclosure supplier must complete the acceptance checklist. The acceptance certificate shall be presented to Philips Healthcare for approval. Possible consequences of deviation from these requirements will be borne by the RF enclosure supplier.

2.2 Floor requirements / Floor provisions

Floor levelness and waviness

Floor levelness and waviness inside RF-enclosure are critical for the correct operation of the system and will be checked in advance of the installation.

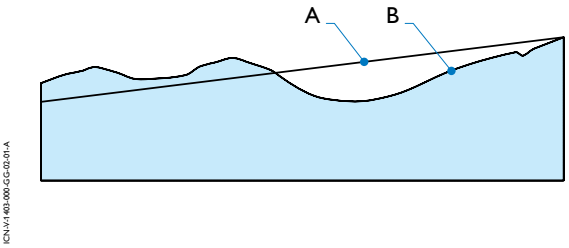

Floor levelness (A) and waviness (B)

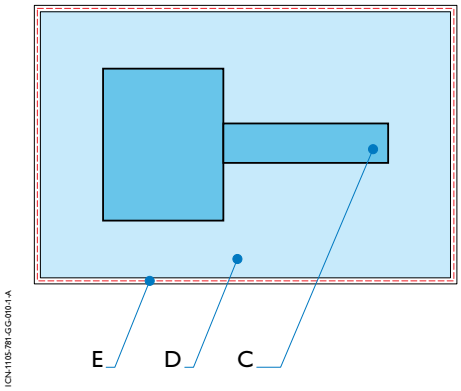

Not to scale: Area of the floor plates (C) and floor area of the room (D)

The floor levelness (A) must not be more than ± 2.5 mm measured between any point of the peripheral floor area (C) of the equipment, where floor pad 2 is the reference. The floor waviness (B) is in the tolerance of the floor levelness.

Philips Healthcare recommends a floor levelness of ±10 mm for the total floor area (D).

Floor levelness for the RF-enclosure (E) must not be more than 2.5 mm/m.

Refer to the chapter *Drawings*, sheet *Floor provisions* for more information.

Foundation of magnet and patient support

Shocks and vibrations up to 0.1 g, in all directions, have to be anticipated. The friction between magnet and floor will normally be great enough to keep the magnet in place (friction factor > 0.1) so no fixing measures are required unless in a seismic area. The patient support is subject to forces induced by operators and patients. To prevent tilting, the patient support must be fastened to the floor.

Supply and fit in floor 1 off 150 x 14 mm minimum (w x d) cable duct. Also fit the Philips Healthcare supplied floor pads. Refer to the chapter *Drawings*, sheet *Floor provisions*.

The RF shield supplier to ensure that prior to fitting, the total structural room levelness is within the specifications given in the section *Floor levelness and waviness*.

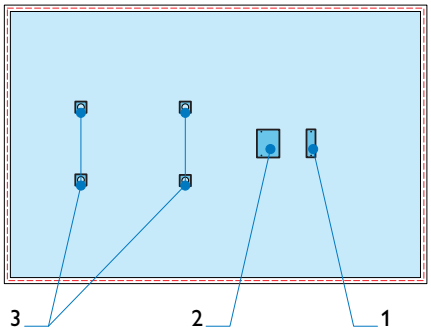

Locations of the floor pads

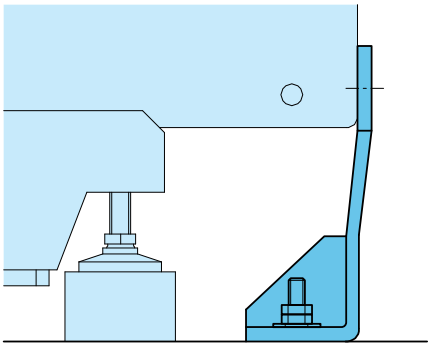

Anchoring the magnet in seismic areas

Where a floor has a surface pressure strength of ≥ 150 N/cm^2, pads 3 are not mandatory, however, Philips Healthcare do recommend that floor pades are used. With or without pads, it is still necessary to cut the floor covering around where the magnet feet will be to prevent the magnet sinking into the floor covering.

Floorload	Pads 1 & 2 (per pad)	Pad 3 (per pad)
Horizontal floorload	4 kN	1.5 kN
Upwards floorload	10 kN per bolt or: 16 kN per pad	N/A
Downwards floorload	2.5 kN per pad (5 kN in total for both pads incl. patient weight))	11 kN per foot (37 kN for 4 feet)

Floorload forces on floor pads

Allowed tolerance of floor pads in vertical plane:

- Floor pad nr. 2 is the reference floor pad. All other floor pads are allowed to be installed max. 2.5mm lower than floorplate nr. 2.

- Floor pads may be installed up to 5 mm below finished floor level when e.g. antistatic floor tiles are used.

The cover of the cable duct running between the magnet and the patient support must withstand a pressure force of 2000 N with a maximum deflection of 0.4 mm. It must be removable, of non-magnetic material, smooth with well rounded edges and flush with the finished floor level. The magnet and patient support must be electrically isolated from the RF enclosure.

The floor pads must not connect the RF shielding electrically with the building or provide an RF leakage path (general specification for attenuation must be met).

Floor covering material

To avoid generating an electrostatic discharge safety issue, the floor must have a resistivity of less than 1 x 10^9 Ω/square or it must comply with NEN EN IEC 61340-4: "Testing of organic floor coverings; testing the ability for electrostatic charge derivation in confined spaces liable to contain explosion mixtures." Verify local codes before installing any flooring that is not rated as static dissipative.

The magnet and patient table mounting plates must be covered with 20 mm overlapping final floor covering of maximum 4 mm thick. The magnet feet must not be placed on the floor covering but direct on the floor plates.

The contractor must ensure that the floor mounting / placement areas defined meet the specifications to receive the holes, fixings and take the load.

The mounting points on the floor must be suitable for the tensile strengths and sheer forces as indicated in the table below.

There shall be no obstructions on the floor (sliding door tracks, etc.) in front of the Philips technical cabinets. The floor must be clear to allow cabinets to be pulled away from the wall for service.

The customer must ensure that the chosen floor covering is fit for purpose and meets the requirements of any room classifications that may apply.

The contractor must ensure that, if present, any floor ducting should be sealed after the completed installation to prevent the ingress of fluids.

2.2.1 Floor requirements table

Overview of floor mounted equipment and fixation specifications

Refer to the chapter *Drawings*, sheet *Floor provisions* for location, quantities and responsibilities

Equipment	Weight [kg]	Fixings	Forces [N]
Patient support	260	4x M10, length depending on RF cage builder	10000, per bolt
Scanner gantry	3700	-	-
Scanner gantry Additional provisions for seismic areas	-	4x earth quake brackets; 4x anchor bolt, 8x nut, 8x washer, 4x insulating bush	-

2.2.2 Floor requirements illustrations

Illustration(s)

Refer to the chapter *Drawings*, *Floor provisions* for the site specific drawings.

2.3 Ceiling requirements / Ceiling provisions

The contractor must ensure that support structure mounting areas defined meet the specifications to receive the holes, fixings, and take the load.

Ceiling armatures inside RF-enclosure

See chapter 3 point 3.2.6 Lighting and small power.

Ceiling speakers inside RF-enclosure

The Philips supplied speakers for patient communication have to be mounted in the suspended ceiling, one speaker in front of the magnet and one at the rear of the magnet.

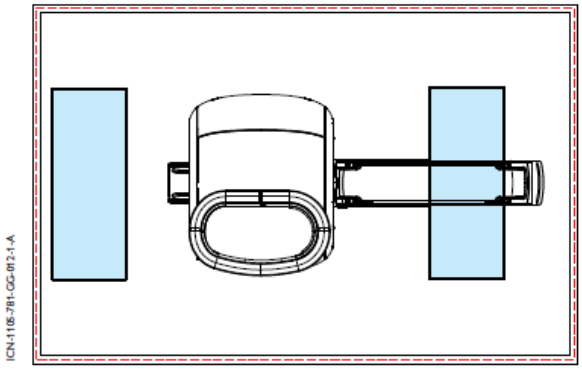

The marked ceiling area's allow placement of ceiling

At the location of the loudspeaker, the suspended ceiling (tile) must be rigid/strong enough to hold a 25 N force during the entire lifetime of the MR system. This to avoid serious injury to persons due to unintended loss of fixation of the loudspeaker and subsequent attraction by the MR magnet. Make sure to reinforce the ceiling tile with a non-magnetic backing plate if e.g. gypsum or glass wool tiles or thin ceiling materials are used. Furthermore, the speaker must be mechanical attached to a 3rd party supplied attachment point located above the suspended ceiling to underside of the RF-ceiling. The interconnecting cable kit (ceiling speaker grip) will be supplied and installed by Philips. This extra ceiling speaker grip is requires to handle possible unintended loss of fixation of the ceiling speaker and subsequent attraction by the MR magnet.

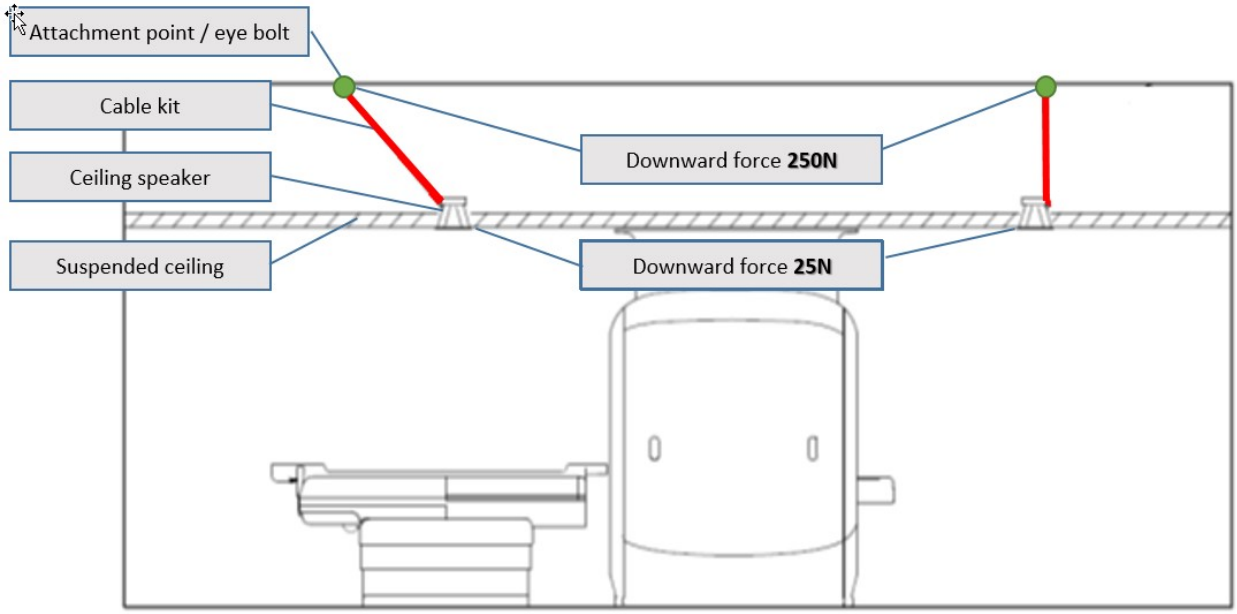

Note!

- The attachment point installed to the underside of the RF-ceiling must be able to hold 250 N impact in case the fixation of the loudspeaker in the suspended ceiling fails.
- Make sure the attachment points/eye bolts are at a location that prevents the speakers from swinging towards the magnet in case a speaker comes loose from its location in the suspended ceiling.
- Maximum allowed fringe fiels at the location of the speaker < 100mT.

Suspension provisions

The suspension provisions for e.g. system wiring and suspended ceiling are not necessarily part of the RF enclosure delivery. However, fixing points for the suspension of these items must be available in the RF enclosure ceiling. Requirements are determined by the local situation.

In addition, suspension points for the suspended ceiling, lighting, air conditioning etc, may be required. There must be no suspension wires located directly at the rear of the magnet or around the air venting interfaces, due to lack of space.

The RF shielding integrity must not be affected by the suspension provisions. The responsibility for ensuring this integrity lies with the manufacturer of the RF enclosure.

The suspension method shall consist of M5 threaded rods in the ceiling of the RF enclosure to support suspension brackets. Rods to protrude 25 mm from the ceiling.

Requirements for suspended ceiling

Special requirements for the suspended ceiling within the RF enclosure:

- It must be constructed from non-ferrous material
- It is recommended to have sound damping
- No hanging objects such as spot lamps are to hang lower than 2600 mm in order to give clearance for the removal of the magnet covers for servicing.
- The access panel or opening in the ceiling to enable a cold head change shall comply with specifications given. Refer to the chapter *Drawings*, sheet *Ceiling provisions*.

Additional attention points for suspended ceilings:

- To avoid spikes, metal e.g. aluminum strips, aluminum light fixtures, air handling grids etc. must be connected to the RF-enclosure grounding point.
- In case of aluminum strips used for the suspended ceiling grid; each individual strip must be connected. In case aluminum tiles, each individual tile must be connected to the RF-enclosure grounding point.
- It is allowed to connect all individual parts to each other and finally to the RF-enclosure grounding point.
- For good electrical connection of the grounding wire a tooth washer is required.
- Before connection is made, coating / insulating finishing must be removed.

Air balancing RF-filter

It is recommended to install a small RF-wave guide or honeycomb grid to avoid air handling issues like under or overpressure due to low air flow unbalance. Size can be discussed between RF-enclosure supplier and installer of the air handling.

Typical dimensions: 300 x 150 mm (LxH).

To optimize air conditioning/air balancing of the examination room, the Air balancing RF-filter can be closed/covered with a lid or louvres (one direction valve) to avoid that air is routed inside the RF-enclosure from an unconditioned source. The lid or louvers must open automatically if an overpressure is present due to air handling failure. To avoid unwanted acoustic noise issues we suggest locating the balancing grid in RF-ceiling and no acoustic path towards the control room.

2.3.1 Ceiling requirements table

2.3.2 Ceiling requirements illustrations

Illustration(s)

Refer to *Drawings,Ceiling provisions* for the site specific drawings.

2.4 Wall requirements / Wall provisions

The contractor must ensure the walls are flat and perpendicular to the floor.

The contractor must ensure that wall mounting areas defined meet the specifications to receive the holes, fixings, and take the load.

Door(s)

For convenient and safe transport of patients on trolleys, and for installation and maintenance actions, a minimum clearance of 1000 x 2050 mm (WxH) (preferred: 1200 x 2100 mm (WxH)) into the examination room is recommended.

RF-door is allowed to swing in- or outwards because overpressure due the Helium vent pipe path failure is not possible anymore. For information regarding air conditioning balancing we refer to text "Air balancing RF-feedthrough" on next page.

For safety reasons the RF-door(s) should comply with the following:

- To be opened or closed within 3 seconds, and with a force less than 100 N.
- Manual operator action required to close the door (not automatic).
- Threshold no more than 20 mm, or 60 mm if provided with ramps no steeper than 10%.
- Simple to operate.
- A power-assisted door must, in the event of a failure, be opened within 10 seconds with a force no greater than 250 N.
- The design of the door posts should be such that they are not damaged by normal contact with patient trolleys.

For the technical room: minimum 900 x 2100 mm (WxH). Smaller doors may hinder facility staff in getting access to the patient and in transferring the patient to a place where life saving actions can be in an emergency situation.

Magnet transfer opening

The magnet is the only system part that in most cases cannot be transferred through the door of the RF enclosure. A special opening to allow its installation in the enclosure must therefore be made available. Refer to the seperate package of pre-install drawings. The underside of the magnet transfer opening should be flush with the floor.

If building constraints make this impossible, the RF enclosure supplier must deliver ramp(s) with slopes no steeper than 5% and a maximum height of 120 mm. The location of the transfer opening will naturally be site dependent. It should, however, comply with the following conditions:

- Preferably be accessible through existing hospital corridor(s), provided these meet other other necessary requirements (i.e. floor loading, corridor width and height).
- It should be accessible from outside through a wall or the roof.

It must be possible for Philips service to re-open the magnet transfer opening without invalidating the RF enclosure guarantee. Should specialist servicing be required, this should be done only by the RF shielding manufacturer's own personnel and any special tools used should be supplied by the RF shielding manufacturer.

RF viewing window

The recommended window size is 1200 mm W x 1000 mm H with the window base no more than 1000 mm above finished floor level. The minimum window size is 900 mm W x 600 mm H.

The transparency of window material (i.e. the mesh) must be better than:

- 30% for an angle between 40 and 140°
- 50% for an angle between 70 and 110°

The windowpane must be made of tempered safety glass. The window material must have an attenuation factor less than 2 in the light color range of 2600 to 4200 K. Moreover, it must cause no color change in the transmitted light to allow the operator to get an accurate impression of the patient's complexion. The window shielding material (mesh) must be sandwiched between two panes of glass. All parts of the window (e.g. the mesh) that contribute to the attenuation must be made of non ferro-magnetic material. For optional sound damping the two window panes should have a different thickness (e.g. 6 and 8 mm).

System filter box & RF feedthrough

The System Filter Box is used to supply mains power and to route the various electrical signals, gradient cooling hoses, helium gas lines and patient ventilation required by the MR-system. The System Filter Box is provided with covers and its maximum weight is 1000 N. The feedthrough frame in the RF enclosure is directly related to the height of the suspended ceiling. Due to this, the location of the System Filter Box is also directly related to the height of the suspended ceiling. The front face to be flush with wall finishing, in position shown on final working drawing and as per dimensions. Refer to the section Drawings. To prevent damage to the system cabling, all edges that might contact the cabling must be well rounded. Supply also:

- 60 off stainless steel M5 screws and washers
- Suitable cover plate for acceptance testing. Where RF shielding material other than copper is used, suitable isolation is to be provided.

Gradient coil air-in & air-out feedthroughs

The RF enclosure must be provided with feedthroughs for the room and MR system cooling. The dimensions of these feedthroughs shall be defined such that the airflow requirements for the MR-system can be met. The positions of the feedthroughs are to be decided in conjunction with the air conditioning supplier. An access panel shall be installed at the air-out feedthrough to enable the hospital engineer to clean the honeycomb filter in the RF shield.

LCC fixings

Supply and fit suitable fixings where shown on final working drawing to secure the top of the Liquid Cooling Cabinet to the wall. The top of the cabinet must be suitably secured to the wall to maintain stability during servicing.

MDU fixings

Supply and fit 2 off M8 threaded rods on wall where shown on final working drawing to support Mains Distribution Unit, plus 2 off M8 nuts and washers. Rods to protrude 15 mm from wall and be able to withstand a shearing force of 250 N per bolt.

System Air Cooling Unit (SACU) RF-filter

The RF-enclosure supplier must supply an RF-waveguide with an internal diameter of 160 mm, to route a ventilation hose (from magnet to SACU) with an outer diameter of 140 mm through the RF-enclosure. We suggest a 160 mm internal diameter waveguide. SACU and hoses are delivered and installed by Philips.

The air travels through a flexible hose. The hose routed through the waveguide and is not connected to the waveguide.

Due to high sound level, preferred location is in the RF-wall between examination room and technical room, near RF-room return air duct.

The mounting studs for wall-mounted SACU have to be prepared prior to installation. *Refer to drawings, wall provisions and detail for the site specific drawings.*

2.4.1 Wall requirements table

Overview of wall mounted equipment and fixation specifications

Refer to *Drawings*, detail sheets *Wall provisions* for location, quantities and responsibilities.

Equipment	Weight [kg]	Fixings	Forces [N]
Mains distribution unit	135	2x M8 threaded rod 2x M8 nut & washer	250, per bolt
System filter box	80	60x M5x35 screw & washer	2500, shearing 1000, tractive
System air cooling unit	25	4X M6 rods	250, per rod
Wall camera for patient observation	1	-	-
Backup power connection panel	135	2x M8 threaded rod 2x M8 nut & washer	250, per rod

2.4.2 Wall requirements illustrations

Illustration(s)

Refer to *Drawings*, *Wall provisions* for the site specific drawings.

3 Electrical

3.1 General information

Please ensure that you read the other sections of this document and take care to work with the other contractors on any overlapping activity.

All work described must be carried out in compliance with specifications indicated in this package provided by Philips Healthcare; any deviations must first be agreed by Philips Healthcare project manager.

All work described in this section is to be executed and supplied by the relevant contractor / party, unless otherwise indicated as Philips Healthcare, or defined in a subsequent document.

The contractor must ensure that live power is provided as specified to the areas defined and is switchable and tested prior to the start of the installation.

The customer must ensure that the mains supply isolator for the equipment in the room must be conveniently accessible to the contractor.

The cable ducting shown in the drawings should not be used for any cables other than those for the Philips Healthcare equipment.

The contractor must ensure that at least 1200 mm free cable length is left on each unconnected end for all contractor-supplied cabling unless otherwise stated

For specific wiring specifications & instructions (contractor) please refer to the drawings.

Electrical ducts and boxes outside the RF enclosure

Electrical ducts and boxes shall be accessible and have removable covers. Floor ducts and boxes shall have watertight covers. Ducts shall be divided into as many as three separate channels by metal dividers, separately specified herein, to separate wiring and/or cables into groups as follows:

- Group a: power wiring and/or cables.
- Group b: signal and/or data and protective ground wiring and/or cables.

The use of 90° ells is not acceptable. On ceiling duct and wall duct use 45° bends at all corners. All intersecting points in duct have cross over funnels supplied and installed by contactor to maintain separation of cables.

Conduit outside RF enclosure

Conduit point-to-point runs shall be as direct as possible. Empty conduit runs used for cables may require pull boxes located along the run. Consult with Philips. A pull wire or cord shall be installed in each conduit run. All conduits which enter duct prior to their termination point must maintain separation from other cables via use of dividers, cross over tunnels, or flex conduit supplied and installed by contractor from entrance into duct to exit from duct. Maximum conduit lengths shown on these plans are calculated from electrical box entrance to electrical box entrance. Any conduit installed below grade must be water tight.

Conductors / Earth conductor

All conductors, separately specified, shall be 75 °C stranded copper, rung out and marked. Do not use metal conduit or raceway as a ground conductor. The earth conductor for the MRI system must be dedicated and totally separate from the conduit, raceway, or structural ground. This is required to maintain the MR system "Quiet Ground" as permitted by local regulation. The earth conductor to be sized per local regulation.

UPS emergency off switch

A 2 kVA UPS is located inside the DACC to supply power to magnet monitoring electronics. Mains power to the MR system can be switched off via a third party supplied mains switch. However in this situation the UPS can still deliver power. This may be unexpected behavior in case of an emergency.

Contact the customer if installation of a third party supplied and installed EPO is required by local regulations when a UPS is present. This to effectively and safety remove power from the UPS when needed.

3.2 Power

3.2.1 Power specifications

The power demands of the scanner gantry determine the power specifications.

3.2.2 Power quality

The power supply to the system must meet the following voltage and frequency requirements.

Requirement	Specification
Voltage	3x 230 - 400 V ±10% at 50/60 Hz or: 3x 480 V ±10% at 60Hz or: 3x 220/380V +/- 10% at 50/60Hz
Frequency	50 Hz ±1 Hz or 60 Hz ±1 Hz

Power supplied to medical imaging equipment must be separate from power feeds to air conditioning, elevators, outdoor lighting, and other frequently switched or motorized loads. Such loads can cause waveform distortion and voltage fluctuations that can affect MR image quality.

Equipment that utilizes the facility power system to transmit control signals (especially clock systems) may interfere with medical imaging equipment, thus requiring special filtering.

Static UPS systems, Series filters, Power conditioners, and Voltage regulators provide a high impedance, nonlinear voltage source, which may affect image quality. Do not install such devices at the mains supply to medical imaging equipment without consulting Philips installation or service personnel.

Line impedance is the combined resistance and inductance of the electrical system and includes the impedance of the power source, the facility distribution system, and all phase conductors between the source and the imaging equipment. Philips publishes recommended conductor sizes based on equipment power requirements, acceptable voltage drops, and assumptions about the facility source impedance. The minimum conductor size is based on the total line impedance and local requirements. Unless impedance calculations are performed by an electrical engineer, the recommended values must be used.

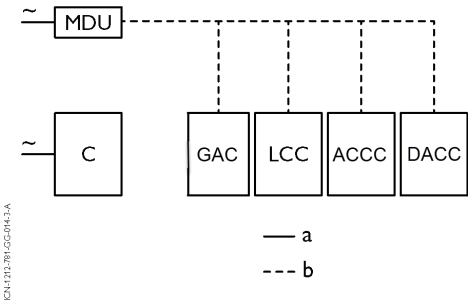

Basic MR power scheme

Note!

Legend

a) Provided and installed by customer

b) Provided and installed by Philips

The hospital mains is connected to the Mains Distribution Unit (MDU), that distributes the power to the Gradient Amplifier Cabinet (GAC), the Liquid Cooling Cabinet (LCC),the Air cooled Cryo-Cooler and the Data Acquisition and Control Cabinet (DACC). The chiller has a separate connection to the hospital mains.

Note!

To minimize the time needed to energize the magnet, the Air Cooled Cryo Cooler must be connected to the magnet directly after the magnet is located on its final location. **It is absolutely required to have the BCP (WIP) and/or MDU connected to hospital power the first day.** Any delay will directly equally delay the time required to energize the magnet and by that the installation duration of the MR system.

Hospital mains power must absolutely be available the first day for this type of magnet! If power not available you must consider to delay the delivery or arrange temporary power.

3.2.3 Power consumption

Requirement	Specification
Mains connection	60 kVA
Rated current	90 A
Maximum mains current	400 A (< 5 ms) / 500 A (< 1 ms)
Fuse protection	100 A
Mains resistance	200mΩ
Distortion power factor	> 0.9
Cos ϕ	> 0.9 (under full load)
Total harmonic distortion (Current; THDi)	< 45%
Mains interruptions	< 0.5 period, minimum intervals of 5 periods
Neutral to PE voltage	< 2% of nominal voltage (line - neutral)

3.2.4 Circuit breaker

An earth-leakage circuit breaker is to be provided between the mains fuse and and the medical equipment depending on local regulations.

3.2.5 Earthing

Protective earth

The RF enclosure must be provided with one central protective Earth (PE) bus-bar/terminal. This PE point must be connected to the hospital PE bus-bar by means of a conductor at least 16 mm2 in cross-section. For safety reasons this conductor must already be installed during installation of the RF-enclosure!

The central earth terminal in the System Filter Box must be connected to the PE bus-bar/terminal of the enclosure by means of a conductor, which must also be at least 16 mm2 in cross-section.

The central bus-bar/terminal of the enclosure must be as close as possible to the central earth terminal of the System Filter Box (maximum 1000 mm) and in the same RF-enclosure RF-panel.

Part of the RF-enclosure

- An RF-enclosure earth connection point shall be delivered and installed by the RF-enclosure supplier.
- It must be possible for a third party electrical contractor to connect a PE bus-bar to the outer part of this RF-enclosure earth connection point.
- It must be possible for a third party electrical contractor to connect the inner PE bus-bar to the RF-enclosure earth connection point.
- Bus-bar to be installed by the local electrical contractor.

Outside the RF-enclosure

- The PE line shall be available in the technical room.
- The PE line shall be connected to the bus-bar.
- The bus-bar shall be located < 1000 mm from the RF-enclosure earth point.
- Cable diameter equal to the MR mains power phase cabling (according IEC).
- Third party equipment and protectively earthed parts shall be electrical connected to this PE bus-bar.
- The PE bus-bar shall be equipped with 2 M8 screw connectors for Philips equipment and enough screw connectors for third party equipment and a connector for the hospital earth cable.

The Philips Mains Distribution Unit will be terminated to the PE busbar by Philips. The Philips System Filter Box will be terminated to the PE bus-bar by Philips.

The outer part of the RF-enclosure earth connection point shall be connected to the PE bus-bar by the local electrical contractor.

Inside the RF-enclosure

- Inside the Examination room a PE bus-bar shall be installed.
- The bus-bar shall be located < 1000 mm from the RF-enclosure earth point.
- Third party equipment and protectively earthed parts shall be electrical connected to this PE bus-bar.
- PE bus-bar shall be equipped with enough screw connectors for third party equipment.
- Delivered and installed by the local electrical contractor or RF-enclosure supplier.

Note!

Due to the technical room layout the central PE bus-bar/terminal of the enclosure must be at minimum 2300 mm above finished floor level.
To avoid spikes, metal e.g. aluminum strips, aluminum light fixtures, air handling grids et. must be connected to the RF-enclosure grounding point.
In case of aluminum strips or tiles for the suspended ceiling, each individual strip or tile must be connected to the RF-enclosure grounding point.
It is allowed to connect all individual parts to each other and finally to the RF-enclosure grounding point.
For a good electrical connection of the grounding wire a tooth washer is required.
Before the connection is made, coating/insulating must be removed.

Earth scheme

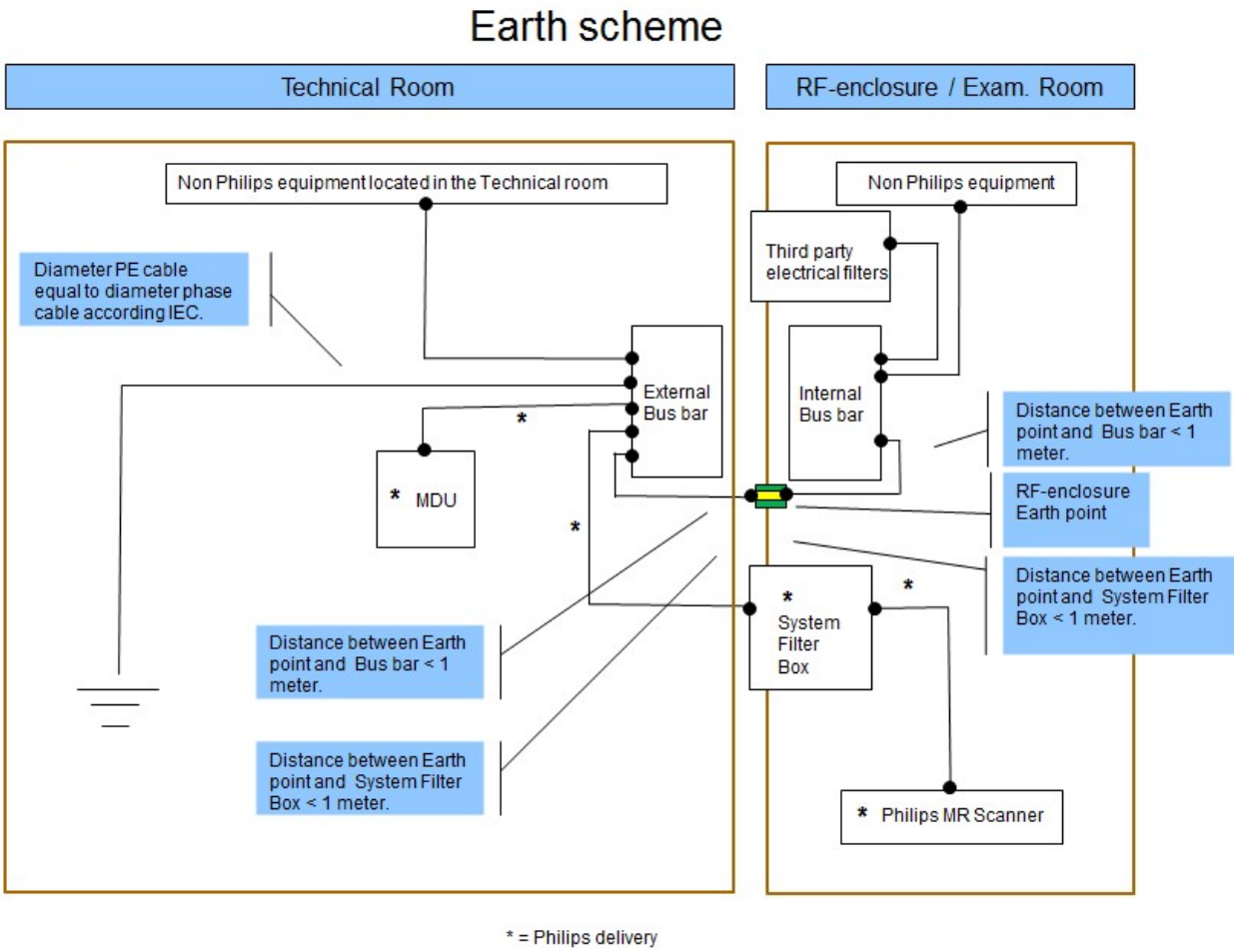

The impedance between any conductive part and the central PE bus-bar/terminal must not exceed 100 mΩ.
All PE conductors used must be at least 6 mm2 in cross-section. Philips does not require an earth leakage switch.

For optimum shielding performance, "loops" inside the enclosure must be minimized. This leads to the following precautions:
- All suspensions e.g. for the helium gas lines and air ducts must also serve to isolate these items from the enclosure.
- Galvanic isolation layer between the enclosure and the building is recommended. Local regulations or the installation instructions of the RF-supplier may require that the enclosure be isolated from the building.
- Isolated in this context means DC impedance greater than 3 kΩ.

Auxiliary electrical filters

All electrical interconnections entering the RF-enclosure that are not part of the MR system will require electrical filters. These filters may give rise to earth-leakage currents in the RF-enclosure, which could present a safety hazard. For complete safety, the total of all the earth-leakage currents generated by all auxiliary electrical filters must not exceed 5 mA. If necessary, use an isolation transformer with the filters to minimize the effects of leakage current.

Philips strongly suggest installing an RF-frame and blank plate for possible future RF-penetrations located at the following locations:

- Between the RF-enclosure wall and the technical room
- Between the RF-enclosure wall and the control room

Caution!

RF-filters not for third party equipment

It is not allowed to use or adapt RF-Filters delivered by Philips Healthcare for third party equipment. Third party equipment need separate RF-filter plates and feedthroughs.

3.2.6 Lightning & Small Power

(Wall)s ockets inside the RF-enclosure

The contractor must ensure that sockets for the Philips equipment only are provided as per the drawings. AC (wall) outlets should be located inside the enclosure for use of third party equipment.

Lighting inside RF-enclosure

The use of incandescent AC light fixtures with reinforced filaments or quartz (halogen) lamps is allowed. The magnetic field will however shorten the lifetime of the filament of the light bulb. For patient comfort, avoid direct light above the patient support and the rear of the magnet.

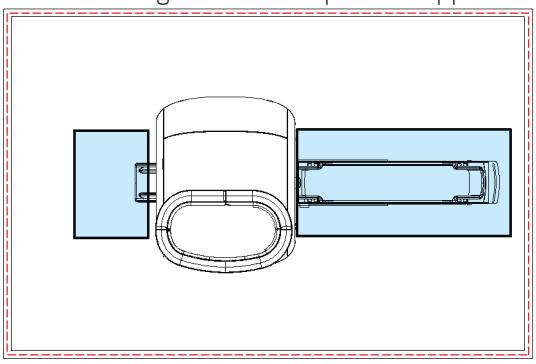

Keep the marked ceiling area's clear of lighting fixtures (blue rectangles).

A spotlight with a separate switch to assist the doctor during intervention procedures is recommended. Two lighting levels (separate control) are required, measured from the floor:
- For servicing: The lighting supplied in the room must meet a minimum of 500 lux.
- Patient examination: Philips advises an adjustable light source of 200 lux.

Caution!

The use of fluorescent lamps (e.g. energy saving lamps), 110-230V LED light bulbs containing integrated LED driver electronics and electronic light dimmers (inside RF-enclosure) is strictly prohibited to avoid RF-interference. Low voltage power supplies located inside the RF-enclosure are not allowed.

Service light and power

A double AC outlet (16 A) and a light switch for servicing purposes must be provided above the suspended ceiling in the RF-enclosure in the vicinity of the magnet turret. The location of the light switch must be reachable by the engineer when he/she opens the removable part of the suspended ceiling. Because the light is a service light and will be used during service actions only, it can be a fluorescent or LED tube. Both tubes give less shadow effects and emit less heat near the engineer working. Maximum length of a fluorescent tube: 600 mm to ignite/start the lamp.

3.2.7 Safety mechanism requirements

The Philips system is equiped with several additional safety provisions. The use of these provisions is regulated by local legislation. Philips Healthcare advises to install the safety provisions at all times to reach maximum safety for personnel and patient.

Mains safety switches

Mains safety switches may be installed inside the RF enclosure. Installation must follow all local regulations. There are no RF filters in the System Filter Box provided for this purpose.

Door open / closed switch

Each door into the exam room must be provided with a switch that signals the open/closed status of the door to the system. The switch(es) must be mounted (mechanically or electrically) outside the RF enclosure and have a contact that closes when the door is closed. Switches must be wired in series with screened cable, and the wire must be rated at a minimum of 30 V DC, 100 mA.

If more RF doors are present, connect the door switches in series.

Emergency Run Down Unit

The MR-system is provided with a magnet emergency rundown unit with one button in the Examination room and one button in the Operator's room to terminate the magnetic field. This should only be used in case of emergency. The buttons shall be mounted at easily accessible and highly visible locations. Take care that the ERDU buttons cannot be pressed by accident e.g. by someone leaning against the button.

3.3 Ducting specifications

The contractor must ensure that:

- Cable ducts and trays are routed as per the drawings.
- Upon completion of the Philips installation, all floor trunking must be suitably sealed to prevent ingress fluids.
- All cable outlets are to be fitted with grommet strips to protect against chafing.
- Cable ducts must be reserved for Philips equipment only.
- All metal cable ducts are bonded and earthed according to local regulations.

The contractor must verify the feasibility of the cable routing as shown in the drawings, any changes should be agreed with the Philips Healthcare project manager.

Chosen materials and methods must comply with local regulations and craftsmanship and prevent cable bending radii smaller than 100 mm (unless specified otherwise).

The contractor must ensure that it is possible to access the trunking at any time during the life of the equipment.

Where wiring is indicated point to point on the wiring diagram, it must be run in suitable trunking, cable tray or conduit.

Ceiling cable ladder

Examination room:

One ceiling cable ladder is required within the examination room for the system wiring (from SFB to the area above the magnet).
This ceiling cable ladder should be:
- Installed above the suspended ceiling and between 2600 and 2900 mm above the finished floor level, depending on the ceiling construction and possible obstacles.
- Made of non-ferromagnetic metal or GRP.
- Made as a ladder tray to allow sufficient cooling of the cables and possibility to tie wrap the cables. Wooden or closed cable trays are not allowed. It must not be suspended by wire suspension bands but plastic or wooden suspension must be used.
Failure to adhere to these requirements will result in image distortion.
- Divided into 2 sections with following specifications:

Item	Specification
Cross section (inner sizes)	500 x 100 mm, containing 2 compartments: gradient: • Gradient: 400 x 100 mm • Signal/power: 100 x 100 mm
Length	Min 3500 mm
Maximum weight capability	1,5 kN/m max
Electric/magnetic shielding	Connected to PE of RF-enclosure

Technical room:

All cabinets have their interfaces at the top. Therefore a raised floor is not needed/recommended anymore. Interconnecting cables are routed via 2 cable ladders above the cabinets (from SFB to the cabinets) and with a clearance of 150 mm between hospital rear wall and cable duct. The first cable ladder must be located at a height of 2300 mm above the finished floor level. A minimum free height of 100 mm required above each cable ladder for easy install of cables/service.

Use a cable tray design for easy in- and outlet of cables to individual cabinets and to allow sufficient cooling of the cables. Therefore we strongly suggest to use a wire mesh tray or ladder tray. The cable ladder trays must have following specifications:

Item	Specification
Cross sections	2x500x50 mm: • Low cable duct, signal cables • High cable duct, gradient cables, RF send cable, Helium gas lines, hoses for gradient coil cooling liquid and power cables.
Length	Min. 3000 mm (shall be able to store overlength RF-cable and HE gas lines)
Maximum weight capability	500 N/m max

Cable lengths

All system cables, gradient cables excluded, have fixed lengths. Lengths provided are the maximum length allowed. Ordening longer cables is not possible. The gradient cable length supplied can be shortened to avoid over length. Contact Site Planning for possibilities. Cable lengths given are measured from cable in-/outlets of the cabinets. This is the site-able or ducted length.

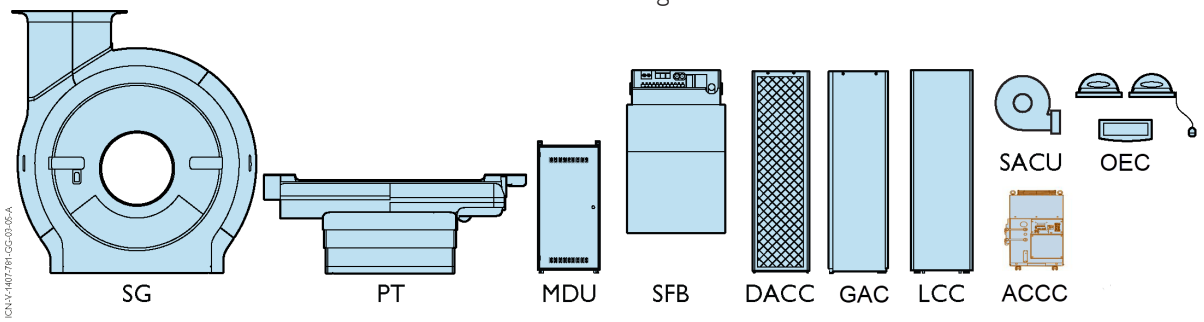

Cable no.	Connection				Cable length [m]
	From		To		
1.	SFB	System Filter Box	DACC	Data Acquisition Control Cabinet	7
2.	SFB	System Filter Box	GAC	Gradient Amplifier Cabinet	7
3.	SFB	System Filter Box	LCC	Liquid Cooling Cabinet	7
4.	SFB	System Filter Box		Magnet Assembly*	10
5.	SFB	System Filter Box	ERDU	Emergency Run Down Unit (Exam Room)	15
6.	SFB	System Filter Box	OEC	Cable Storage Rail	25
7.	SFB	System Filter Box	ERDU	Emergency Run Down Unit (Control Room)	25
8.	LCC	Liquid Cooling Cabinet	SACU	System Air Cooling Unit	14
9.	LCC	Liquid Cooling Cabinet	ACCC	Air Cooled Cryo-Cooler	0
10.	DACC	Data Acquisition Control Cabinet	GAC	Gradient Amplifier Cabinet	7
11.	DACC	Data Acquisition Control Cabinet	LCC	Liquid Cooling Cabinet	7
12.	DACC	Data Acquisition Control Cabinet		RF door switch	25
13.	DACC	Data Acquisition Control Cabinet	OEC	Cable storage rail	25
14.	GAC	Gradient Amplifier Cabinet	LCC	Liquid Cooling Cabinet	7
15.	MDU	Mains Distribution Unit	WIP	Backup Power Connection Panel	1
16.	MDU	Mains Distribution Unit	DACC	Data Acquisition Control Cabinet	10
17.	MDU	Mains Distribution Unit	GAC	Gradient Amplifier	8
18.	MDU	Mains Distribution Unit	LCC	Liquid Cooling Cabinet	13
19.	MDU	Mains Distribution Unit	All other units		10

Cable no.	Connection				Cable length [m]
	From		To		
20.	MDU	Mains Distribution Unit	OEC	Cable storage unit	25
21.	MDU	Mains Distribution Unit (50 Hz countries)	ACCC	Air Cooled Cryo-Cooler	10
22.	MDU	Mains Distribution Unit (60 Hz countries)	ACCC	Air Cooled Cryo-Cooler	7
23.	MDU	Mains Distribution Unit (60 Hz countries)		Transformer	7
24.	OEC	Cable storage rail		Peripherals on cable top	0.8

*Gradient cables are supplied in one set with a length of 15 m. Cable length can be divided/cut between length needed inside the technical room and length needed inside the examination room. However 18 m length is possible with an extra cable set (extra cost). Please contact SPS to order a duplicate extra set of cables to be able to extend the length to maximum 18 m.

3.4 Networking specifications

3.4.1 Local Area Network (LAN)

The contractor must ensure that the network connection points are supplied, fitted and connected as per the drawings.

The contractor must work with the customer to ensure that a connection to the hospital network is available, prior to the start of installation, at the network connection points as shown in the drawings.

The customer must allocate an IP address and other network specific information requested by Philips, for each network connection shown in the drawings.

Further information and guidance on LAN setup and requirements will be provided by the Philips Healthcare project manager.

3.4.2 Remote Service Network (RSN)

Remote Service Network (RSN) is a service provided by Philips Healthcare to enable remote network connections between Philips medical devices and the Philips Remote Service Center. RSN can be used for remote technical support, diagnostics and application assitance. The facility uses secure Virtual Private Networks (VPN) to communicate over the internet to the hospital. The system needs one or more Ethernet RJ-45 wall sockets with connection to the hospital network as per the drawings

Further information and guidance on RSN setup and requirements will be provided by the Philips Healthcare project manager.

3.5 Fire detection

It is strongly recommended that the MR facility is equipped with fire and/or smoke detection systems. The precise nature of the fire, smoke alarms and other safety precautions are to be determined by an expert supplier or consultant knowing the local regulations and insurance conditions. The following points should be kept in mind:

- The presence of a strong magnetic field and an RF enclosure puts specific demands on the type of fire/smoke detection system to be installed.
- If fire detection in the RF-enclosure is required, the sensors must be located in the air-out ducts of the MR system, outside the RF-enclosure.

Possible alternatives are:

- to install the detection inside the air out/return duct located outside the RF-enclosure.
- to install an Aspirating Smoke Detector.

3.6 E-Alert

3.6.1 E-Alert

Philips E-Alert is a tool that continuously monitors key parameters of the MR system. Philips E-Alert is a service to alert people that specific parameters of the MR system are out of specification. Alerting is done via email and/or SMS. The following alerting solutions are available:

- **Philips E-alert integrated software solution.**
  Mandatory if customer allows outbound email communication. Content: part of regular application software.
- **Philips E-alert stand-alone hardware solution.**
  Mandatory if the Philips E-Alert integrated software solution is not possible. May be used additionally to the Philips E-Alert integrated software solution. Content: controller, various sensors and mini UPS.

Note!
Contact responsible person to arrange required resources in defined time-line as described in DMR345651, which is located at InCenter.
If needed consult:
- Philips stand-alone hardware solution, installation, DMR260329 (on InCenter) for more information about the network configuration to be done together with the hospital IT specialist.
- Philips E-Alert integrated software solution, installation, DMR254364 on InCenter.

3.6.2 Site preparation

Site preparation

The integrated software solution uses the same Internet connection as the host and does not require site preparation. However it requires SMTP Server of customer or Relay STMP over PRS. Contact sales to find out if the integrated solution requires purchasing of Relay SMTP over PRS.

The stand-alone hardware is not a part of the delivery but can be ordered separately. Contact sales to find out if the stand-alone hardware solution should be installed on the system:

1. Philips E-Alert base kit, 45980104967x;
2. Philips E-Alert MR add-on kit, 45980104971x.

The stand-alone hardware solution requires a power outlet and an additional internet connection via Ethernet. Both located in technical room and at < 2 m from the Philips cabinets. This solution can also be connected via relays to sound a hospital alarm or to trigger a hospital telephone dialer whenever it raises an alert.

4 Mechanical

4.1 General information

Please ensure that you read the other sections of this manual and take care to work with the other contractors on any overlapping activity.

All work described must be carried out in compliance with specifications indicated in this package provided by Philips Healthcare; any deviations must first be agreed by Philips Healthcare project manager.

All work described in this section is to be executed and supplied by the relevant contractor / party, unless otherwise indicated as Philips Healthcare, or defined in a subsequent document

4.2 Heating, Ventilation and Air Conditioning (HVAC)

Air conditioning requirements

Caution!
Scan procedures always involve the emission of RF energy. This can heat up the patient. The amount of energy absorption (Specific Absorption Rate) has a direct relation with the ambient conditions. SAR thresholds are only valid for room temperatures and relative humidity within requirements below.
The MR scanner and especially the surface coils are very sensitive concerning temperature and humidity. If the examination room ambient requirements are not in specification, spikes and electrostatic discharges can result in poor image quality and a high failure rate of the system parts. Therefore, ambient requirements given below are mandatory.
Please stress the importance to the client and the local HVAC contractor.

The Philips equipment requires the following temperature and humidity conditions:

Requirement	Specification
Examination room	
Temperature	+18 to 22 °C
Maximum temperature change	5 °C/10 min
Relative humidity	40 - 70% (non-condensing)
Air conditioning capacity	2 kW
Control room	
Temperature	+18 to +24 °C (Human comfort) +10 to +35 (MR equipment)
Maximum temperature change	5 °C/10 min
Relative humidity	30 - 70% (non-condensing)
Air conditioning capacity	0.3 kW
Technical room	
Temperature	+15 to +24 °C
Maximum temperature change	5 °C/10 min
Relative humidity	30 - 70% (non-condensing)
Air conditioning capacity	Standby: 8 kW *

*) Heat load inside technical room is normally 2 kW. The heat load to air inside the technical room will increase dramatically if Air Cooled Cryo Cooler is activated. Therefore the hospital supplied air cooling must be able to deliver 8 kW cooling.

Note!
Heating, ventilation and air conditioning requirements concern all rooms (technical room, examination room and control room) and must be maintained 24 hours a day, 7 days a week.

The following heat outputs of the Philips equipment must be taken into account, please refer to the drawings for the precise locations.

Equipment	Heat output [W]
Data Aquisistion Control Cabinet	Max. 1000
Wall camera for patient observation	-
Monitor for patient observation	100 (additional)
Patient trolley (FlexTrak fixed)	-

Equipment	Heat output [W]
Accessory cart	-
Gradient amplifier	-
Liquid cooling cabinet	1200
System filter box	1000
Mains distribution unit	200
Patient support	-
Operator's console	-
System air cooling unit	700
Intellispace portal HX	870 (additional)
Scanner gantry	2000
Backup Power connection panel	-
Air Cooled Cryo Cooler	4800 (50Hz), 5600 (60Hz)

Gradient coil heat dissipation (1 – 15 kW) is removed via liquid cooling of the gradient coils.

Please refer to the drawings for the exact locations.

- Do not switch on the system until the environmental conditions in examination room and technical room meet the above mentioned requirements.
- Switching on and operating the system while environmental conditions are not within specification affects the reliability of the system negatively.
- In some cases the system will not start up if the temperature and/or humidity are out of specifications.

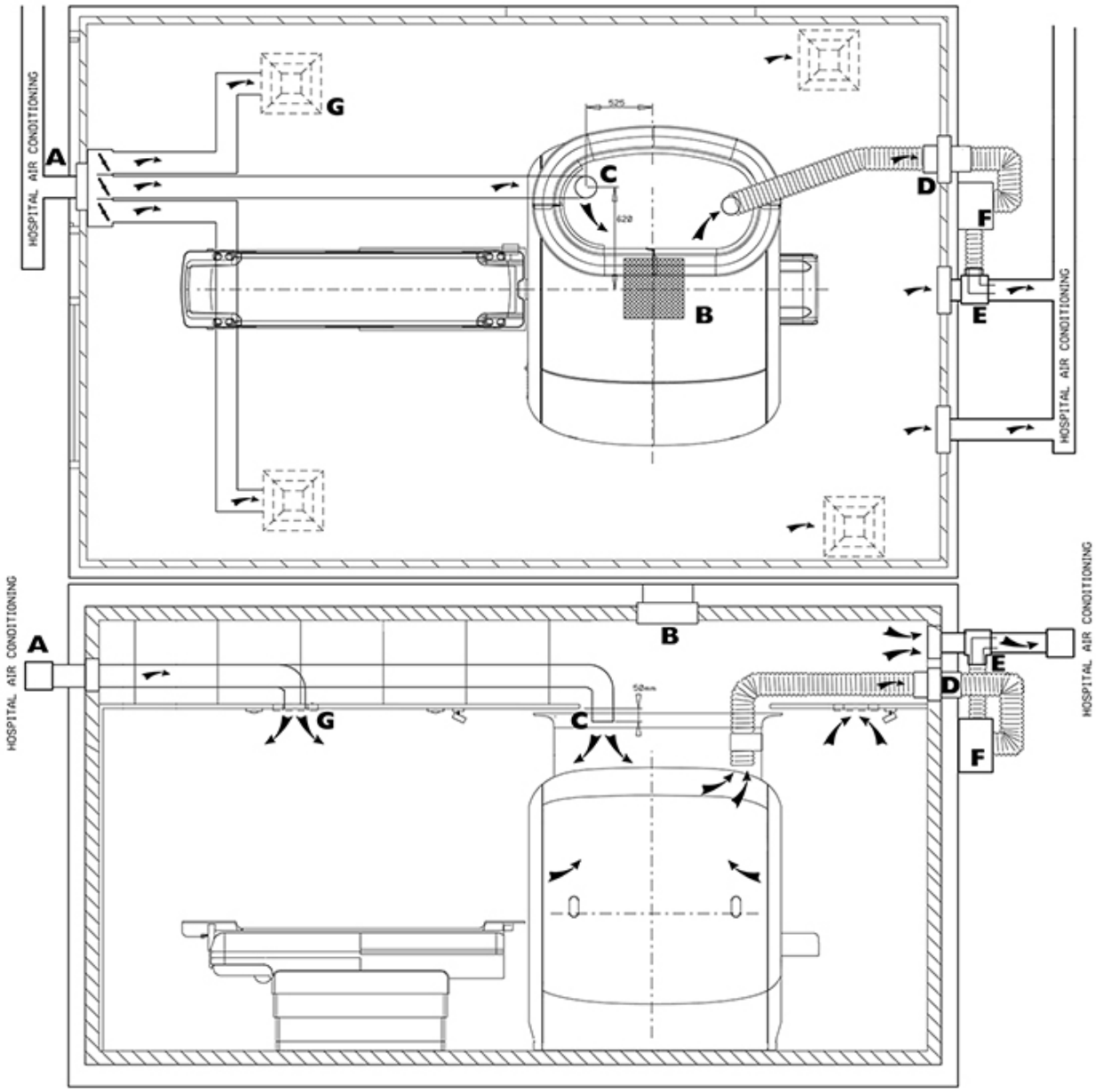

Principal flow diagram of system air-cooling, top and side view

Examination room specifications

- The conditioned air must enter the examination room via RF-feedthrough wave-guides (air grids) (A).
- A slight overpressure is required to avoid penetration of dust.
- The air exchange rate in the examination room, under suspended ceiling, must minimally 5 times per hour at a minimum airflow of 400 m^3/h. The air inflow under suspended ceiling must disperse evenly to ensure a comfortable situation.
- Additional 400 m^3/h air must be supplied above the suspended ceiling in the top covers near the magnet turret.

Note!

A minimum amount of 800 m^3/h of conditioned air is required.

- A part of the air, 400 m^3/h will be removed out of the RF-enclosure via the SACU and dumped into the air out duct located outside the RF-enclosure.
- The airflow is required to cool the magnet gradient coil and body coil.
- This SACU consist 1 hose going from the air exhaust interface on top of the magnet assembly (C), via gradient air exhaust RF-feedthrough (D), to a Philips supplied fan located outside the RF-enclosure.

Note!
400 m^3/h need to be removed via a RF-air feedthrough of the examination (RF-room).

- If local code dictates extremely higher (> 800 m^3/h) amount of air circulation rates due to the use of Helium or anesthetic gases, this extra volume must be removed via additional separate air ducts and RF-air grids in the RF-enclosure.
- It is recommended that all air ducts inside the RF-enclosure and any associated openings through the RF-enclosure are made and installed by RF-enclosure supplier.
- Consult an air conditioning supplier and/or RF-enclosure supplier to determine the best solution.

Note!
Air conditioning of the examination room must always be maintained while the system is in use. If the room temperature becomes too cold, the MRI system will not start up.
Installation of temperature and humidity sensors in the RF-enclosure can be a problem due to the RF-filters required for each electrical cable entering and leaving the RF-enclosure and possible electrical interference. An alternative is to locate the sensors directly outside the RF-enclosure in the HVAC air return duct.

Additional examination room air feedthrough requirements

1. System Air Cooling Unit (SACU) (F)

The SACU air-cools components inside the magnet assembly.The SACU fan and motor are located outside RF-enclosure. The fan transports air out of the examination room through the magnet assembly and through a 3rd party supplied RF-waveguide and dumps the air outside the RF-enclosure in the air return duct of the examination room. The SACU is powered and controlled by the LCC. The SACU switches on/off depending on clinical use.

SACU fan and motor are located outside the RF-enclosure.

Third party shall supply an interface with a 127 mm outer diameter in the air return duct of the examination room located direct after the air return duct exists RF-enclosure (E). The interface shall allow a smooth down stream flow of the system air cooling. A 45° angle is suggested. Here the Philips air return hose will be connected.

This interface shall end maximum 2 m form the SACU.

Flow: 400 m^3/h.

Heat load in the hospital air return duct during scanning: 0.7 kW.

Refer to drawings, wall provisions and detail for the site specific drawings.

Note!
It is recommended that the gradient air exhaust RF-feedthrough be equipped with a removable and cleanable filter, see requirements RF-supplier.

2. Air balancing grid (B)

It is recommended to install a small RF-feedthrough to avoid air handling issues like under or overpressure due to low air flow unbalance. Risks in case no air balancing grid is provided:

- Difficult to open/close RF-door.
- RF-walls (shielding foils) could be damaged.

3. Emergency venting system (not provided by Philips) (G)

It is strongly recommended to install an emergency venting system in the examination room that is activated if the room oxygen level is less than 18%.

This venting system shall be able to extract the volume of the examination room 20 times/hour or more and vent this outside the building. The air shall be vented outside the hospital as high concentration helium can lead to suffocation.

Possible under-pressure in the magnet rom due to air extraction shall be avoided by sufficient air supply.

A fan automatically activated by an oxygen level detector is recommended. It must also be possible to activate the system manually during e.g. helium refill of the magnet.

An output signal for remote data logging or alarm is recommended. Flow under the ceiling adjustable valve 500 m3/h.

Technical room specifications

- The MR heat dissipation is depended on type and duration of the acquisition. This means that the actual heat dissipation is variable. Air conditioning of the technical room at average heat dissipation results in undesired high temperature gradients caused by the peak of the system parts.
- A slight air overpressure is recommended to avoid penetration of dust.
- The HVAC system shall be designed around equipment cabinet air flow/circulation. Modifying the room layout is allowed only after consulting HVAC supplier to avoid insufficient cooling.

Pollution

- The MRi suite is equipped with highly technical medical electric systems. To avoid failure due to pollution care should be taken regarding dust although individual parts have air filters installed.
- Ceilings, walls and floors shall be sealed to prevent that dust particles will be released into air. Special attention is needed regarding the cement floor slab under raised floors.
- Before the delivery starts and after each construction activity, the site shall be cleaned before the MRi system is switched on.
- The air condition system shall be equipped with 90% < 10 micron particles and 80% < 5 micron particles filters.

Note!
If a dedicated HVAC-system is used in the technical room it is recommended that a system be designed to provide malfunction warnings since excessive over/under temperatures or high/low relative humidity may damage the MR system.

Control room specifications

- The feeling of comfort depends not only on temperature and humidity but also on local practice. It is the responsibility of the hospital to define the appropriate conditions.

4.3 Liquid data

The works and requirements detailed below are the responsibility of the contractor and/or related subcontractors. All work carried out must comply with the local by law water regulations. All water connections to Philips Healthcare equipment must be made by the contractor, with a Philips Healthcare engineer in attendance. The specifications stated are for Philips Healthcare equipment only. They do not take into account any pipework, valves, filters or changeover panels. It is the responsibility of the mechanical services system designer to accurately calculate the pipework and pumps accordingly.

Chilled water/coolant is required to the Liquid Cooling Cabinet (LCC). The LCC will distribute and cool through a secondary circuit other parts of the MR system. Liquid Cooling Cabinet (LCC) and optional chiller must always remain switched on. To prevent automatic loss of magnetic field after chilled water fails for the liquid cooled cryo cooler, the Air cooled Cryo Cooler will start up to prevent loss of magnetic field.

If available, it is preferred to use the hospital chilled water 24/7 during the whole year instead of a chiller, this because normally hospital cooling has sufficient back up. If this is not available then a third party supplied chiller must be installed to provide the necessary coolant. In that case a water detection system is mandatory to detect possible leakage of cooling liquid. If possible, consider the installation of water drainage in the floor.

All components in the chilled water supply shall be of non-ferrous material.

Note!

Liquid cooling is required 24 hours/7 days per week.
Make sure that the hospital is informed what will happen if the chilled water supply to the LCC fails. Failure of the chilled water distribution system (hospital supplied or chiller supplied (A)) will result in a shutdown of the MR system.
After failure of the chilled water supply, the Air cooled Cryo Cooler will be switched on as a back up.
It is the customer/contractor responsibility to ensure that the backup water source meets the flow, temperature, pressure and purity requirements provided. See the table primary cooling requirements.
If a temporarily tap water connection for the Cryo-Cooler (B) is needed, please order a LCC water tap connection (Philips order no. 4598 000 27601).

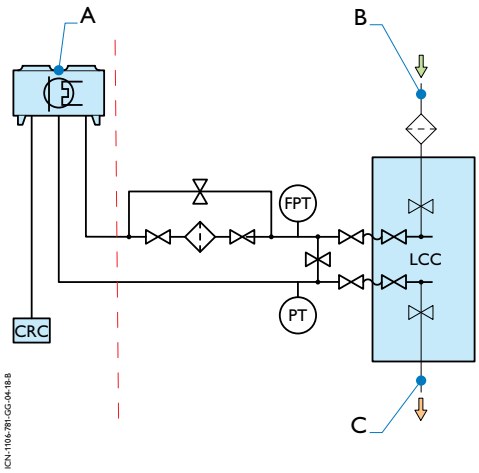

Principal flow diagram for liquid cooling

Primary coolant flow is not regulated by the MR via internal valves. The amount of flow through the primary circuit is constant. To avoid coolant distribution problems inside the LCC, the minimum amount of coolant requirements must be followed.

Liquid cooling specifications

To avoid coolant distribution problems in the Liquid Cooling Cabinet the minimum coolant requirements must be followed.

Item	Specification
Quality	Potable tap water
pH	6.0 - 8.0
$CaCO_3$	< 250 ppm
Chlorine	< 200 ppm
Suspended matter	< 10 mg/l, less than 100 micron particle size
Cooling liquid inlet temperature	6 °C - 16 °C (12 °C preferred)
Maximum flow	5400 l/h
Temperature stability	± 2 °C per 10 minutes (within inlet temperature change
Maximum primary cooling liquid pressure	600 kPa (= 6 Bar)
Ethylene or propylene glycol concentration	Minimum 0%, maximum 50%
Heat dissipation to liquid / chiller capacity	5 kW (idle situation) - 40 kW (maximum during a scan)

Primary coolant requirements

Flow requirements

The flow in litres per hour and the inlet temperature in °C of the chilled liquid needs to fall between the two lines in each of the graphs in order to maintain enough cooling capacity. Maximised flow to avoid temperature instability in the secondary circuit.

Flow requirements LCC (100% water)

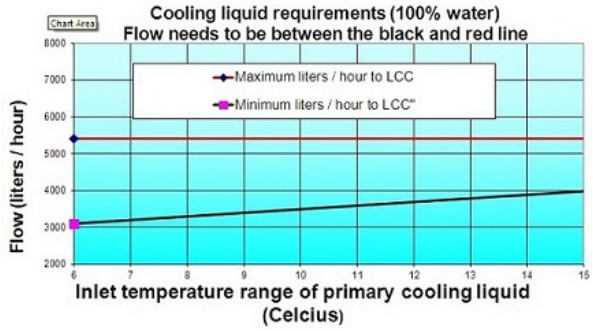

LCC pressure drop 100% water

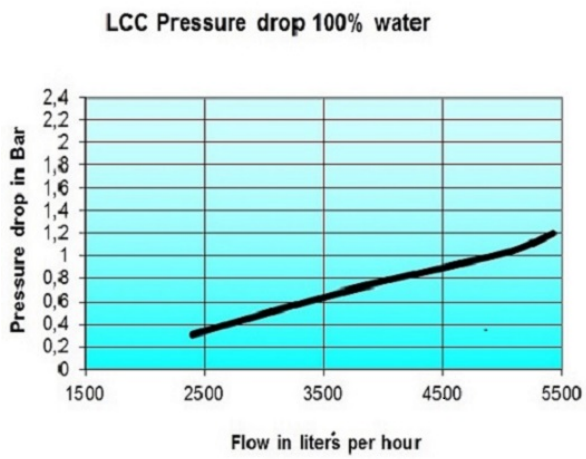

Note!

If needed due to local requirements it is allowed to use a mixture of maximum 40% of Glycol. Pressure drop will increase depending on mixture and temperature of the chilled water to be used. Make sure the supplier of the chilled water calculates the correct flow needed.

Plumbing

Supply and fit suitable copper pipework from the chiller to the Liquid Cooling Cabinet or Combi Cabinet, as shown on the drawings.

Supply also 12 off 1/2" plastic pipe clips for Philips Healthcare engineer to fix the helium gas lines to the wall in computer room.

Pipework to be terminated approximately 2 m from the finished floor level on the wall and no less than 1 m from the Liquid Cooling Cabinet or Combi Cabinet. All piping to be provided by customer/contractor, including ball valves, branching tees and filters. The customer/contractor to supply flow, pressure and temperature gauges for troubleshooting and monitoring purposes.

All metal pipework shall be insulated to prevent condensation and to minimize heat gain from the ambient air.

Chilled water recirculation lines should be opaque to avoid the growth of algae. Furthermore, according to IEC, these third party interface points must be clearly marked with text labels by contractor to show MR coolant INLET and MR coolant OUTLET to make an ambiguous interface to the Philips LCC.

Make bends in the piping only with long radii, minimum 300mm. Where a dedicated airco unit with liquid cooling is used in the computer room, the liquid supply may also be connected to the Liquid Cooling Cabinet (LCC) if the liquid conditions and availability are within specification.

Primary circuit

Hospital chilled water connection must installed within 3 m from the Liquid Cooling Cabinet (LCC). Measured fom top of LCC to cabinet entry interface

Hospital supply connection point	Hospital return connection point
1½ BSP-P thread flat seal male. Minimal length tread 20mm	1½ BSP-P thread flat seal female

Hospital connection points

Philips supply connection hoses	
1½ BSP-P thread flat seal female	1½ BSP-P thread flat seal male, threaded length = 20mm

Philips connection points

Secondary circuit

All hoses are supplied and installed by the Philips Healthcare engineer.

Attention should be paid to the required airflow, vibrations and additional heat dissipation if the chiller is to be installed inside the computer room. Metal pipe work with a sufficient size diameter must be provided with shut-off valves in both water supply and return pipes. Additional requirements for chillers installed in the open air:

- Installation on raised, vibration absorbing concrete base.
- Appropriate shelter to prevent damage from rain, snow, dust etc.
- Sufficient ventilation must be maintained at all times.

If the environmental temperature may drop below 0°C, a low ambient kit with, for example, wrap around heating wire around pipework, cover heating around chiller etc. is needed to prevent frost damage.

In case of aluminum strips or tiles for the suspended ceiling, each individual strip or tile must be connected to the RF-enclosure grounding point. It is allowed to connect all individual parts to each other and finally to the RF-enclosure grounding point. For a good electrical connection of the grounding wire a tooth washer is required. Before the connection is made, coating/insulating must be removed.

- Galvanic isolation layer between the enclosure and the building is recommended. Local regulations or the installation instructions of the RF-supplier may require that the enclosure be isolated from the building.
- Isolated in this context means DC impedance greater than 3 kΩ.

Chiller

The information given is general, specifications are brand-specific and questions about siting must be discussed with the chiller supplier. Pipes with sufficient diameter must be provided with a flow meter, temperature gauge and (emergency) shutdown valves. To avoid condensation, pipes must be installed. If a chiller is installed outside, a low ambient or tropical kit must be supplied, depending on the climate situation. We recommend installing a minimum 250-liter water buffer in the chilled water system to smooth out the dynamic behavior of the MR heat load.

Other parts of the liquid cooling system to be placed in the equipment room: the Chiller Remote Control (CRC), placed on a wall in the Control Room.

The model, type number, position of the chiller (external or internal) and interface connections required must be submitted to the contractor by the chiller supplier prior to any work being carried out. Alternative provisions may also be provided by the contractor in the event of chilled water failure. This may involve switching over to a second back up chiller.

Note!

A suitable froststat may be required if the chiller is installed in the open, to avoid damage from sub zero temperatures.

4.4 Water

Other than the liquid cooling requirments (Refer to the section *Liquid cooling*), the Philips equipment has no requirements in this discipline.

4.5 Sewerage

The Philips equipment has no requirements in this discipline.

4.6 Sprinkler

The Philips equipment has no requirements in this discipline.

4.7 Compressed air

The Philips equipment has no requirements in this discipline.

4.8 Gases

4.8.1 Helium

This system is a sealed magnet. No site planning requirements are needed related to helium.

RF waveguide notes

The system is without a helium vent pipe. Due to that the RF-enclosure does not require an RF-feedthrough frame.

5 Environmental protection

5.1 Magnetic resonance

5.1.1 Magnetic field homogeneity

Image quality is dependant on the homogeneity and stability of the magnetic field (B0). The homogeneity of B0 can be distorted by static ferromagnetic objects such as floor reinforcement (rebar, structural beams, etc.). The stability of the magnetic field (B0) can be disrupted by moving ferromagnetic objects (cars, trains, elevators, etc.). These can cause variations of B0 which will produce image artifacts such as ghosting. Electromagnetic fields such as current in power lines, motors, generators, and transformers can also cause B0 variation. The magnitude of the variation will decrease as the source gets farther away from the magnet. As such, there are minimum required distances to the magnet for every type of disturbance, depending upon its properties (weight, current, etc.). Disturbances measured in the Z-axis (direction of the patient table) are most critical for image quality. Solutions for sites violating requirements will depend on the source of disturbance and construction of the site. To help identify potential disturbances, sources can be classified into seven categories:

1. Static ferromagnetic objects (beams, rebar, etc.)
2. Moving ferromagnetic objects (cars, trucks, etc.)
3. Moving magnetized objects
4. Electrically Powered Rail Systems (trains, trams, subways)
5. Electromagnetic fields (power lines, transformers, motors)
6. Static magnetic fields (other magnets)
7. Coherent and non-coherent vibrations

Static ferromagnetic objects

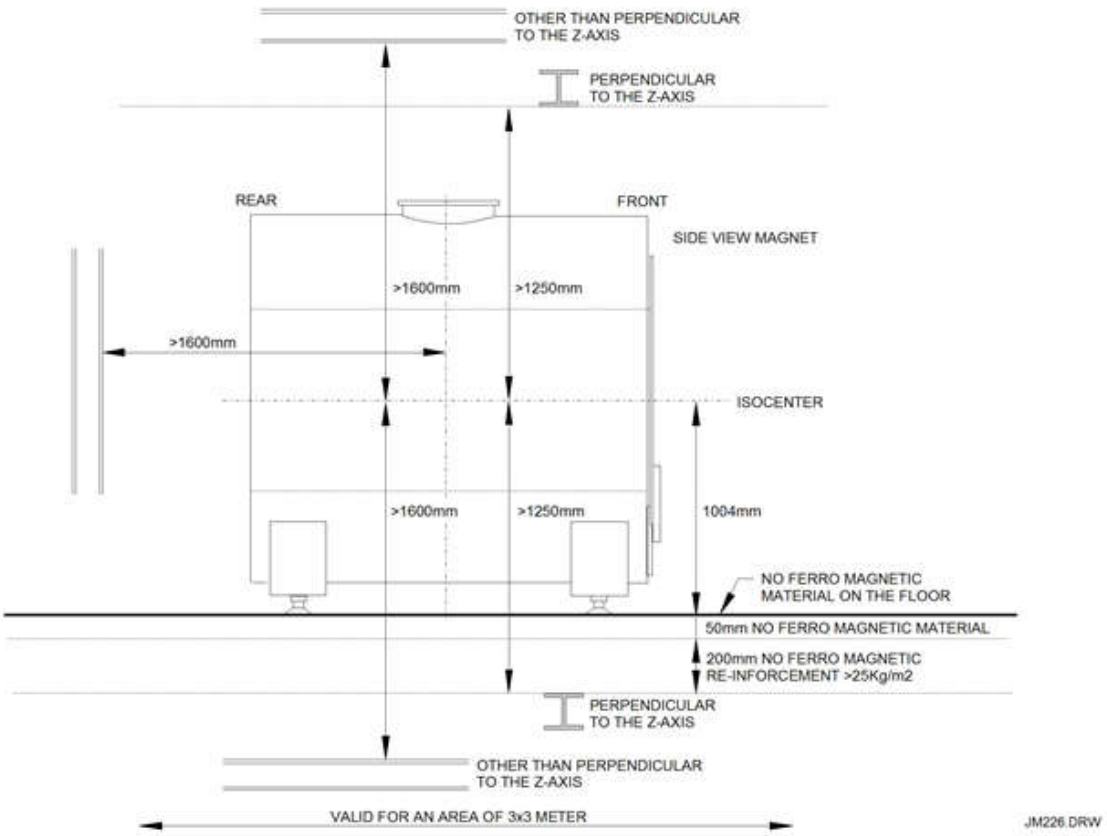

Static ferromagnetic objects

Note!

Beams for construction

When beams for construction reasons are required < 1.25 m from the iso-centre plane, these must be made of non-ferromagnetic material:

Not all stainless steel is non-ferromagnetic. Use a bar magnet to test if the material in non-ferromagnetic.

- Stainless steel (AISA 316L, 304 or 321)
- Aluminium

Moving ferromagnetic objects

Ferromagnetic objects such as trucks, cars, and trolleys can be magnetized by the earth's magnetic field and by the magnet's fringe field. The graph shows the minimum distances allowed for moving ferromagnetic objects versus the weight of these objects.

Some ferromagnetic objects will become permanently magnetized due to local high currents (e.g. lifts) or by repeatedly entering the fringe field of the magnet (e.g. trolleys).

A save distance can be found by multiplying the weight of the moving ferro magnetized mass by 10 and compare the outcome with the table below.

Following table shows the minimum distance allowed for moving ferromagnetic objects versus the weight of these objects. Measured from Isocenter.

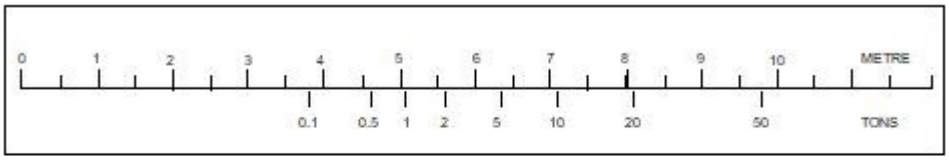

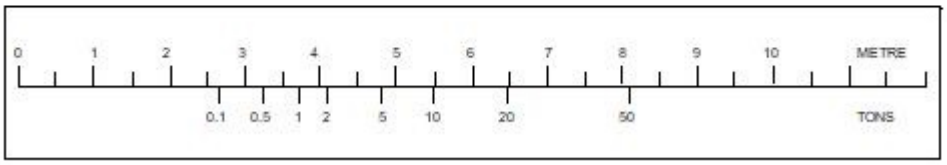

Moving ferromagnetic objects

Moving magnetized objects

Some ferromagnetic objects are magnetized because of high currents repeatedly entering the fringe field of the magnet (e.g. elevators). The safety distance for these objects can be calculated by multiplying their weight by 10 and using the chart *Moving ferromagentic objects*.

Electrically powered rail systems

Electric trains, tramways, and subways are typically powered by electrical traction. For railways with overhead power lines, the current through the power lines (and the returning current through the rails) will induce high magnetic field variations that will extend over a large region. These fields will have a small variation in the direction perpendicular to the power lines. Therefore, B0 variation depends on the distance from the power line to the isocenter, the current, and the angle between the power line and the magnet's Z-axis (0° is parallel to Z-axis). Afore mentioned is the reason that a B0 measurement is recommended. The table shows the minimum distance allowed for electrically powered rail systems versus current and its angle to the magnet Z-axis.

	Angle (degrees); 0° is parallel to Z-axis						
	0°	15°	30°	45°	60°	75°	90°
Current = 750 A	17 m	19 m	21 m	23 m	24 m	25 m	25 m
Current = 2000 A	18 m	32 m	35 m	38 m	40 m	41 m	41 m

Minimum distance for electrically powered rail systems

Electromagnetic fields

Currents in power lines, large transformers or electric motors near an MR system can affect the stability of the magnetic field since they also produce electromagnetic fields. The table helps to calculate the minimum distances allowed.

Object with electromagnetic field	Safety distance from magnet isocenter (m)
Power line (500 A)	5
Transformer (650 kVA)	10
Motor (30 kVA)	5

Electromagnetic fields

In case of other values, the safe distance can be calculated with the following formula:

$\sqrt{(X/old)} \times$ distance = new distance

X = new value, old = value from table above, distance = distance from table above.

For example, power line 1500 A: $\sqrt{(1500A/500A)} = \sqrt{3} \times 5 = 8.7m$.

Static magnetic field e.g. other magnets

If an MR system be installed next to another MR system, ensure that the strength of the magnet field from the other system does not exceed the specified values at isocenter of the future system. If the field is between certain values, then the magnet must be re-shimmed when the other system's field goes on or off. The able shows the maximum gauss field allowed.

Allowed field strength of another MR system at isocenter	
Field strength of other system (see notes)	Result
< 0.05 mT (*)	Always possible
> 0.05 mT AND < 0.3 mT (*)	Re-shimming required
> 0.3 mT (*)	Not allowed

Static magnetic field

(*) Equal to the actual local earth magnetic field. No influence from the MRI-fringe field. This is typical 1.0m further than the projected 0.1m T-fringe field.

Note!

Note that these values are for Philips magnets only. The customer must provide sensitivity about other magnet vendors.

Important!

Possible counter measures

If minimum distances are not met, image quality problems are likely to occur. B0 variations can be measured at various angles to find the most optimum angle to site the future Z-axis of the MR system if the distances or the angle to the isocenter are not exactly known. If minimum distances are not met, contact local Philips service to test and evaluate the site.

5.1.2 B0 site survey

If one of the disturbing sources is closer to the magnet, a B0 measurement can help to investigate borderline siting situations.

A B_0 measuring set (DC and AC) for a site survey cannot be purchased or rented from Philips Healthcare, a third party must do the testing. Our preferred RF shielding suppliers can do these measurements. The measurement must be done according to the following procedure:

- The frequency to be measured is between 0 and 100 Hz.
- Measuring probe in the future isocentre beginning in the z-axis with 45 degree intervals in the horizontal plane.
- Measure during clinical working hours.
- Measure during worst case situation (rush hour, visiting hours (many moving lifts)), during the use of nearby transport roads. All possible sources of disturbance must be active.
- Measure with the different disturbing sources switched on and off.
- Information peak to peak presented in frequency band.

DC specification

The maximum allowed quasi DC (>0 - 8 Hz) value depends on distance and angle of the B_0 disturbances. Peak-to-Peak (P-P) specification is the difference measured due to one single event. Slow B_0 changes with peak-to-peak time intervals of 2 minutes or more can be ignored.

Any moving ferromagnetic material must stay outside the 0.3mT fringe field.

Survey results with B_0 readings between both curves need extra attention by the BIU MR helpdesk for further evaluation. In this case the following information is needed:

- Measured disturbances electronically presented in nT versus time and nT versus frequency.
- Identification of the disturbance (car, lift, train, transformer, power line).
- The value of the disturbance (weight, current or power).
- The distance and angle of the disturbance to the isocentre.
- A schematic sketch that represents the location of the magnet in relation to the disturbance source.
- How often does the disturbance occur?
- Pictures that give a better understanding for evaluation of the site by BIU.

Depending on the given information, siting could be possible. Survey results above the top curve are to be rejected or the customer accepts a certain time frame when the system cannot be used i.e. when the disturbance is present.

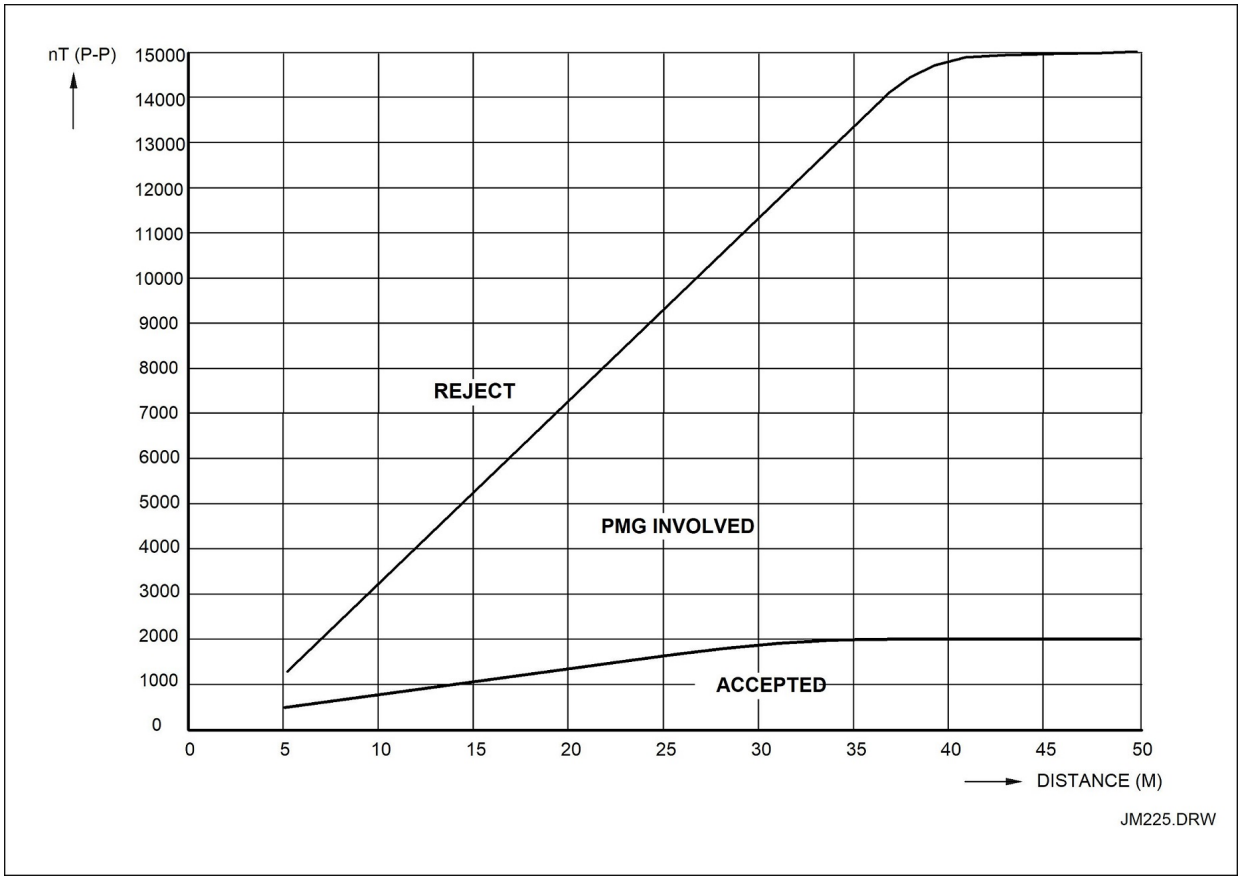

Allowed peak-to-peak low frequency (quasi DC) external field variation for the MR-system as function of external source distance

Important!

Legend:

d: distance in metres

Φ: magnetic field in nanotesla - peak to peak

If the source is at a larger distance, the disturbances allowed are higher. Therefore, it is important to identify the source of the disturbances.

If the disturbing source is closer than 5 m this graph cannot be used. Use the weight versus distance table in section *Magnetic field homogeneity*.

AC Specification

The maximum allowed AC value depends on the frequency of the magnetic field disturbances. Only disturbances measured in the length axis of the magnet must be considered. Therefore the angle of the MRI system can be very important. Maximal allowed external field variation disturbance by AC fields in table below.

Frequency [Hz]	Maximum allowed field [nT P-P]
16.7	550
20	700
25	900
30	1100
50	2100
60	2500

Allowed AC PP

5.1.3 Vibration specifications

To investigate potential problems, a site survey is recommended.

It is the customer's responsibility to contract a vibration consultant to test and interpret resources and, if needed, design site solutions. Solution can be the isolation of the disturbing source or structural modifications of the building.

Floor vibrations can affect the stability of the magnetic field which leads to poor image quality. In order to evaluate the acceptance of a site, environmental testing is mandatory. Measurements are to be completed by local Philips service and evaluations are completed by Philips Site Planning department. Contact local Philips service to arrange an environmental test and evaluation.

The allowed acceleration is depending on the frequency of the disturbances. Vibrations can be divided in 2 groups, coherent and non-coherent.

Coherent vibration

Coherent vibrations have a signal with a constant amplitude and frequency. Typical sources are electrical powered motors, air handling systems etcetera. These vibrations provide a constant disturbance during the entire measurement period (scan) of the MRI system. Coherent signals result in very clear image artefacts and because of that are the main source of image problems. But then again these typical disturbing sources can probably be handled once the source is found by e.g. balancing, decoupling or installing the source on vibration pads.

Non-coherent vibration

Non-coherent vibrations can be categorized into pulse, transient, or noise-like vibrations. Pulse and transient vibrations are single events, and will decrease in a short time. Noise-like vibrations have no specific frequency and are broadband. Typical noise-like vibrations are caused by vehicular traffic, people walking, or the resonance of the building structure. These sources are difficult to eliminate. Furthermore, the building structure can have a negative response on the vibration induced. The only possible solution is to change the construction of the building (i.e. isolate MR floor slab). In this case, the customer must consult with a third party vibration and structural engineer.

Frequency	Measurement resolution	Number of averages
0.2 - 80 Hz	0.2 Hz	20 (2 minutes sample time)

Settings for Fast Fourier Analyzer

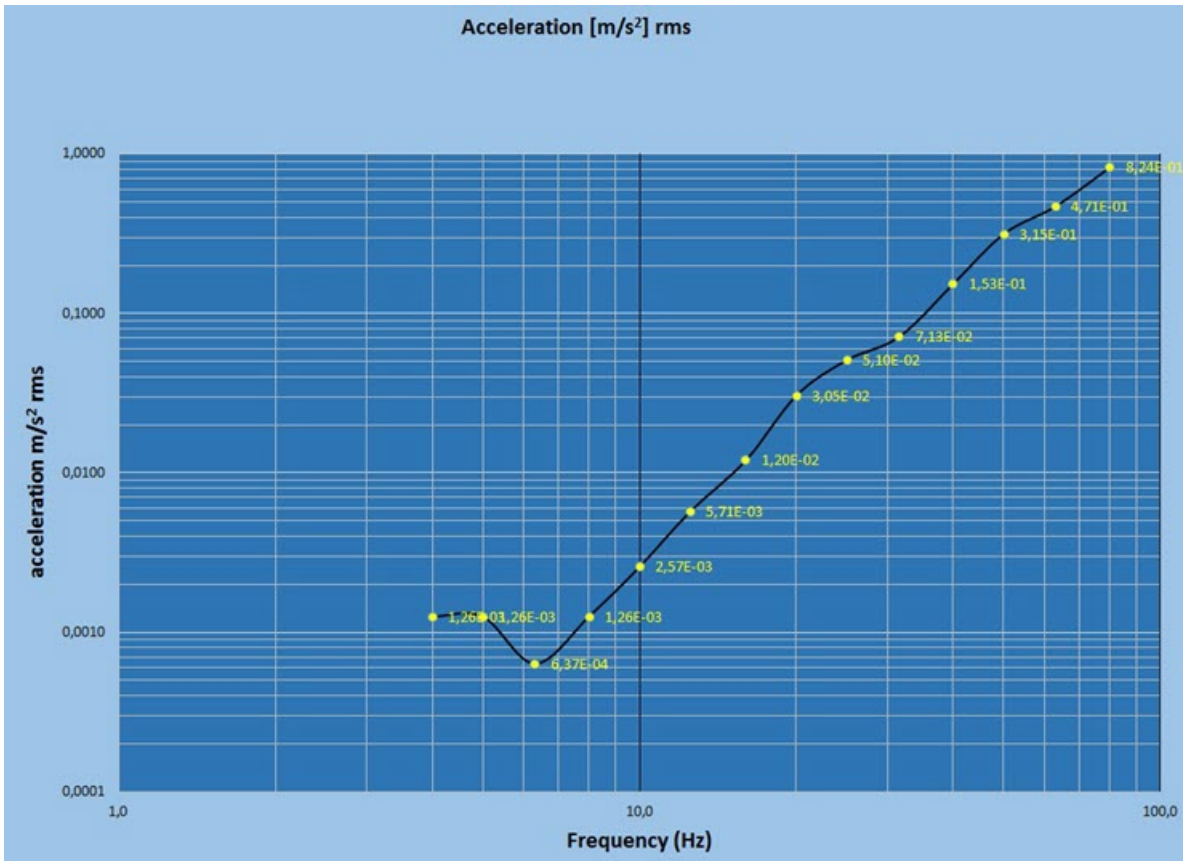

Graphical representation of the maximum allowed acceleration (peak-to-peak) in terts band.

Third Party Consultation

Third party vibrations pads are not allowed. All other third party solutions to external vibration disturbances (i.e. pneumatic isolated floors, etc.) must be designed to meet all of the MR system's specifications (vibration specification, shimming requirements, proximity of ferromagnetic material, etc.). In addition, long term affects (such as creeping), must be considered since the magnet's relationship with the patient table is extremely critical. Philips does not review or approve any third party designed solutions.

5.1.4 RF interference / Electrostatic discharges

The MR system is sensitive to interference from external radio frequency signals. If external RF signals at the same frequency as the system frequency are expected, an RF measurement has to be performed. Due to cost, it is advisable to rent the equipment or have the complete measurement carried out by a specialised company.

If transmitters with high EM levels such as radio and television stations with matching frequencies are in the vicinity, a site survey shall be considered. The following specifications are valid before the system and RF enclosure are installed

- System frequency: 63.87 MHz
- For this imaging frequency, the bandwidth is ± 300 kHz
- The external RF signal may not exceed 60 dBµV/m

Note!

RF measurement

The RF measurement has to be carried out by an external company if required. Contact Philips Healthcare if a measurement is required.

5.2 Maximum magnetic field strengths

The Philips delivered equipment is sensitive to magnetic fields. The table lists the maximum magnetic field strengths for the ordered equipment. Refer to the drawings for the precise locations.

Equipment	Maximum magnetic field strength [mT]
System filter box	7
Mains distribution unit	15
Liquid cooling cabinet	15
Gradient amplifier	15
Operator's console	15
System air cooling unit	5
Wall camera for patient observation	3000
Monitor for patient observation	10
Patient trolley (FlexTrak fixed)	-
Accessory cart	-
Accessory cabinet	-
Data Aquisistion Control Cabinet	5
Backup Power connection panel	15
Air Cooled Cryo Cooler	15
Ceiling speakers	100

6 Drawings

6.1 Site specific drawings

The technical drawings created for this project are added behind this page as a set.

The set normally contains the following drawings *(can vary depending on building works and system configuration)*:

- Site layout
- Building modifications
- Schematic cross section(s)
- Floor provisions
- Ceiling provisions
- Wall provisions
- Details

Refer to the table of contents on the cover page of the drawing set for the actual contents.

Important!

Not for construction!

The provided drawings are the graphical part of the site preparation specifications and not intended for direct application as construction drawings. It is the responsibility of the customer or contractor to check the local feasibility of the provided specifications and solutions before embedding them into the actual construction drawings.

If the customer or contractor decides to use the Philips drawings unchanged, mark each printed or digital copy of each drawing sheet clearly with the following statement:

"Approved for construction by <name of authorized engineer> on behalf of <contractor>"

completed with the date and signature of the authorized engineer.

7 Annex

7.1 Electrical diagram

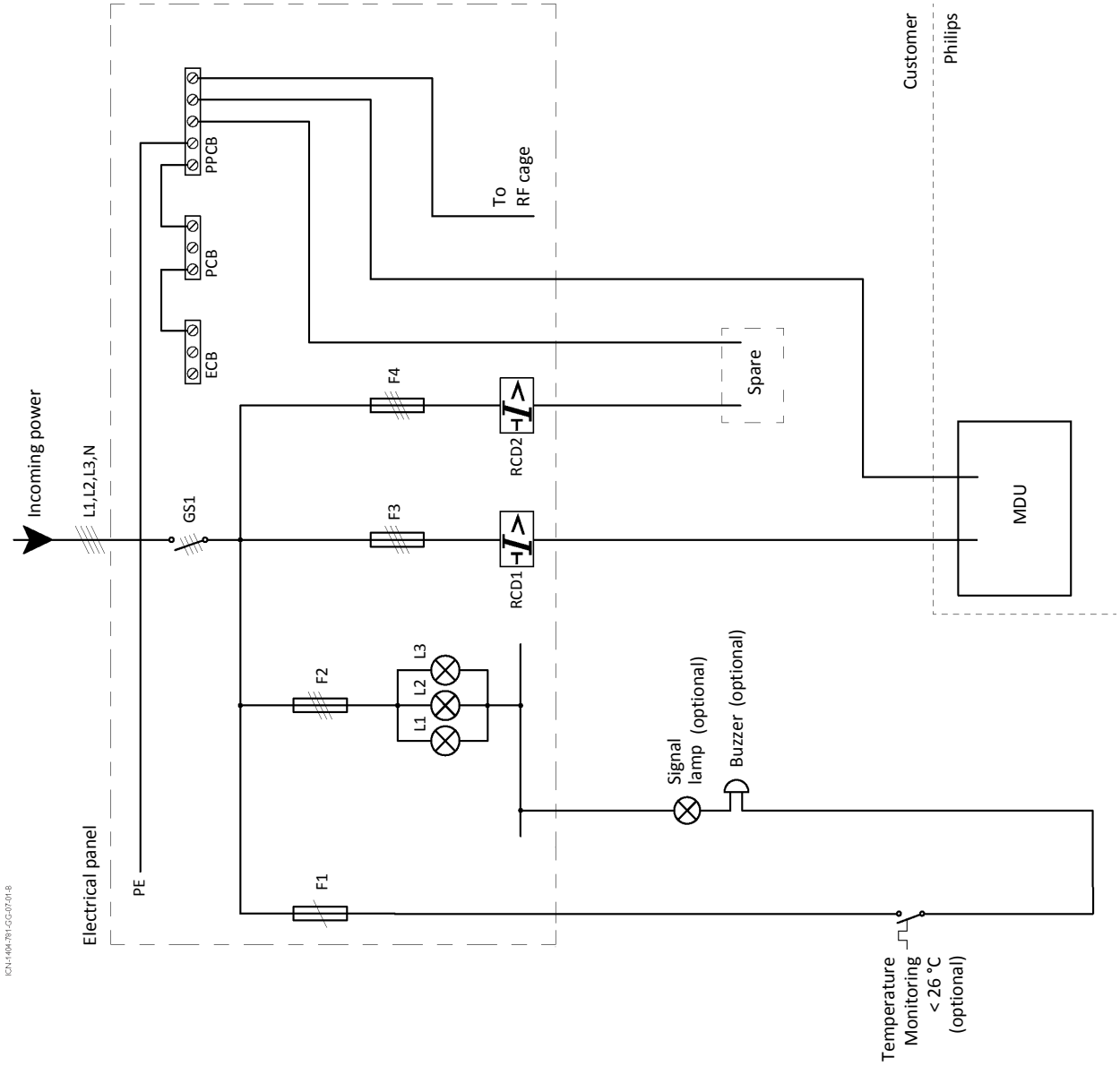

Requirement	Specification
Voltage	3x 230 - 400 V ±10% at 50/60 Hz or: 3x 480 V ±10% at 60Hz or: 3x 220/380V +/- 10% at 50/60Hz
Frequency	50 Hz ±1 Hz or: 60 Hz ±1 Hz
Mains switch (GS1)	Site specific according local regulations

Fuse protection			
F1	F2	F3	F4
6 A	2 A	100 A	16 A

Residual current device	
RCD1	RCD2
100 A / 0.03 A	16 / 0.03 A

Colophon

Philips Healthcare
A business of Royal Philips N.V.
www.philips.com/healthcare
healthcare@philips.com

Your project is executed by

www.healthcare.philips.com/main/support/support-for-your-site/site-planning/index.wpd

© 2020 Koninklijke Philips N.V.
All rights are reserved

This document was assembled specifically for the project mentioned on the front page and contains configuration and site specific information. Do not use for any other purpose.

Published by Philips Healthcare – Commercial Operations